Operation Manual

Kebab HS

OPERATION MANUAL

TABLE OF CONTENTS

Introduction 2
- Caution 2
- Notes 2
- TV and radio interference 2

Safety Precautions 3
- Symbols 3

Part Names and Functions 9
- Kebab HS System front view 9
- Kebab HS System rear view 9

Recommended Works 10
- Recommended work shape 10
- Chuck specification 11

Attaching and Detaching the Kebab HS System 12
- Kebab HS Compatible printers 12
- Attaching the Kebab HS System to a printer 12
- Detaching the Kebab HS System from a printer 23

Setting Up the Work 27
- Setting up the work for the first time after starting up/Changing the work type 27
- When using the same work as previously 35

Setting the Printing Start Position 36
- When determining print starting position based on the [Kebab Origin-Set] position 37

Creating Chucks 38
- For straight media 39
- For tapered media 40

Modifying the UV Light-Blocking Cover and Measuring Light Levels 41
- Modifying the magnetic sheet 41
- Measuring UV light leakage after setting up the work 45

Creating Print Data 50
- Measuring the print area size 50
- Creating print data 50

Test Printing 51

Enabling Kebab Printing 52

Printing Data 53
- Start printing 53
- Abort printing 56

Adjustment 58
- Origin adjustment 58
- Head spacing adjustment 59

Error List 61

Machine Specifications 63

MIMAKI ENGINEERING CO., LTD.

D203843-31

Introduction

Thank you for purchasing the Kebab HS system.
The Kebab HS System is a dedicated system for printing images designed by the user on to cylindrical work.
Read this manual thoroughly to enable you create images to suit your requirements.

Other company and product names mentioned herein are the trademarks or registered trademarks of the respective companies in Japan and in other countries.
Unauthorized reproduction of any portion of this document is strictly prohibited.
© 2024 MIMAKI ENGINEERING Co., Ltd.

Important!

- Kebab HS is an optional item for the UJF-3042/6042MkIIe, UJF-7151 plusII / UJF-7151 plusIIe and UJF200-3042/6042.
  Read the corresponding printer operation manual thoroughly in conjunction with this manual.

Caution

With the exception of what is provided in the warranty provisions, Mimaki Engineering Co. Ltd. does not assume any liability for any damage (including, but not limited to, the loss of profit, indirect damage, special damage, or other monetary damages) resulting from the use or inability to use the product.
The same shall apply in cases where Mimaki Engineering Co. Ltd. has been notified of the possibility of damages.
For example, Mimaki Engineering Co., Ltd. shall not be liable for any losses (of media, etc.) using the product or indirect losses caused by items created using it.
Please note that Mimaki Engineering Co., Ltd. is not liable for any financial damage or lost profits resulting from the use of the machine, or for any claims from third parties.

Notes

- While every effort has been made to ensure the accuracy of the information in this operation manual, if you find any issues, please contact our service office.
- This operation manual is subject to change without notice due to improvements.

TV and radio interference

The machine emits high-frequency electromagnetic radiation while operating. It may cause TV or radio interference if installed or used under inappropriate conditions. Accordingly, there is no assurance that the machine will not affect special radio or TV equipment.
If you believe the machine is interfering with radio or TV reception, turn it off to investigate. If the interference disappears when the power is turned off, the product is likely to be the cause of the interference.
Try any of the following solutions or combinations of these solutions:

- Change the orientation of the TV or radio antenna to find a position where interference does not occur.
- Place TVs or radios away from the product.
- Plug TVs or radios into outlets on a different power supply path than the product.

Safety Precautions

Symbols

In this manual, symbols indicate and explain precautions. The indicated symbol varies depending on the nature of the precaution. Make sure you understand the meaning of each symbol and use the machine safely and correctly.

	Explanation
	Failure to observe the instructions given with the [Warning] symbol may result in death or serious injuries to personnel. Be sure to read the precaution carefully and use the machine correctly.
	Failure to observe the instructions given with the [Caution] symbol may result in injury to personnel or damage to property.
	Important notes regarding use of the machine are given with the [Important] symbol. Use as reference information.
	Useful information is given with the [Tip] symbol. Use as reference information.
	Indicates the corresponding page for related information.
	The △ symbol indicates precautions (including danger and warning items) that must be followed. Specific precautions are shown in the figure, as in the warning of electric shock shown at left.
	The ⃠ symbol indicates prohibited actions. Specifically prohibited actions are shown in or near the figure, as in the prohibition of disassembly shown at left.
	The ● symbol indicates actions that must be taken or instructions that must be followed. Specific instructions are shown in the figure, as in holding cords by the plug when unplugging them, shown at left.

Warning

- Be sure to provide a ventilation system if using the product in a poorly ventilated or enclosed room.

Extractor outlet installation

The following precautions must be observed to prevent the machine malfunctioning:

(1) The shape of the extractor outlet will depend on the customer's building configuration, but ensure that the opening area accounts for at least 50 % of the duct.

(2) If a shutoff valve or similar device is installed on the extractor outlet, the shutoff valve must be opened when using the machine.

- The ink used in the machine corresponds to a class 4 category 3 petroleum-based hazardous material. The machine must therefore be used in an environment where naked flames are strictly prohibited due to the potential risk of ignition.
- When cleaning the print head, be sure to wear the UV shade goggles and gloves supplied with the UV printer. There is a risk of ink or maintenance liquid coming into contact with your eyes.
- If ink or maintenance liquid is accidentally ingested, seek immediate medical attention, then remain at rest. Do not re-ingest any material vomited. Contact a poison control center afterward.
- If you inhale a large amount of vapor and feel unwell, move to a well-ventilated area immediately, keep warm, and rest. Seek medical attention promptly.
- Waste ink should be disposed of in accordance with the local regulations.

Strictly forbidden actions

Warning

Do not disassemble or modify

- Never attempt to disassemble or modify the machine or the ink cartridges. Disassembling or modifying will result either in electric shock or malfunction of this machine.

Do not use in humid environments

- Do not use in humid environments, and do not splash water on the equipment. Failure to observe these instructions may result in fire, electric shock, or failure.

When a problem occurs

- Use of the machine under an abnormal condition, as when it is emitting smoke or odors, may result in fire or electric shock. Turn off the power switch immediately, and then be sure to unplug the machine from the outlet. Once you have confirmed that smoke is no longer being emitted, request repair from your dealer or service office.
- Never attempt to repair the machine yourself. This is hazardous.

Handling ink cartridges

- Some components (photoinitiators) are toxic to aquatic life. Avoid leakage into natural water systems and domestic wastewater.
- Store ink cartridges and waste ink tanks out of the reach of children.
- If ink comes into contact with your skin or clothing, immediately wash it off with soap and water. If ink comes into contact with your eyes, rinse immediately with water and seek medical attention.

Wear protective gear

- Be sure to wear the UV shade goggles and gloves supplied with the UV printer when cleaning the suction nozzle and there is a possibility of ink or maintenance liquid splashing. There is a risk of ink or maintenance liquid getting into your eyes. The ink or maintenance liquid can also cause skin irritation if it comes into contact with your hands.

Handling the power cable

- Use the power cable provided.
- Do not attempt to modify the cable, and avoid damaging or breaking it. The power cable can be damaged if heavy objects are placed on it, if it is heated, or if it is pulled. This can result in fire or electric shock.

Warning

Power supply and voltage



- Use a power supply that meets the power supply specifications. Be sure to plug the power cable into a grounded power outlet. Failure to observe these instructions may result in fire or electric shock.



- To prevent electric shocks during maintenance, always turn the main power switch off, and remove the power plug. Capacitors of some units may take one minute to discharge. Before maintenance, always wait three minutes after turning off the main power supply switch and disconnecting the power plug.
- Failure to observe these instructions may possibly damage the LED UV unit. It is recommended that the LED UV unit be replaced at its rated life or sooner.



- The main power supply switch of the machine should be turned on only by personnel who are thoroughly familiar with how to operate the machine.
- Do not touch the LED UV unit while it is illuminated or immediately after it has been turned off, as it will be hot. Failure to observe these instructions may result in burn injuries.

Handling the LED UV unit



- Do not use in environments where there is a risk of ignition (such as in the presence of gasoline, flammable spray, thinners, lacquer, and dust). Do not place paper or fabric near to or over the LED UV unit. Failure to observe these instructions may result in fire.

Handling anti freezing liquid



- Use dedicated Mimaki anti freezing liquid. Failure to observe these instructions may result in failure of the cooling system.
- Do not touch the anti freezing liquid with your bare hands.
  If the anti freezing liquid comes into contact with your skin or clothing, wash off with soap, and rinse immediately under running water.
  If the anti freezing liquid comes into contact with your eyes, rinse with copious amounts of water and seek medical attention.
- Be sure to read the product safety data sheet (MSDS) before using the anti freezing liquid.
- If the anti freezing liquid is accidentally ingested, induce vomiting immediately, and seek medical attention.
- Unused anti freezing liquid should be disposed of as follows:
  ●Soak up with sawdust or rags, and incinerate in an incinerator.
  ●Request disposal by a licensed industrial waste disposal contractor, clearly specifying the contents.
- Take care to prevent ignition sources such as static electricity or impact sparks.





- Be sure to wear the UV shade goggles and gloves supplied with the UV printer when handling anti freezing liquid.

Ultraviolet (UV) Radiation and the UV-LED Unit



- The LED UV unit is classified as Risk Group 3 in accordance with IEC 62471 and IEC/TR 62471-2.
- Ultraviolet (UV) radiation may leak from the area surrounding the LED UV unit. Exposure of the skin or eyes to UV radiation may cause inflammation, visual impairment, or even skin cancer. Repeated exposure, even to low levels of UV radiation, may result in chronic health effects. Do not look directly at the unit while it is illuminated. Always wear safety glasses and take appropriate precautions to prevent UV radiation from contacting the skin or eyes.



- Ultraviolet radiation hazards to the eyes include acute effects such as foreign body sensation, pain, and watery eyes. Chronic effects include cataracts and other symptoms. When using the machine, wear protective gear such as gloves, long-sleeved clothing, a face visor, and the UV shade goggles supplied with the UV printer.



- When handling the glass on the underside of the LED UV unit, always wear the gloves provided, and do not touch it with your bare hands. Otherwise, UV curing will be significantly impaired. If the glass becomes dirty, clean using clean gauze moistened with alcohol. (Do not wipe the outer cover with alcohol. This will remove the paint.)



- The performance and service life of the LED UV unit is greatly dependent on the UV emitter and UV power supply unit. Never use LED UV units or UV power supply units other than those recommended by Mimaki. Mimaki can accept no liability for any faults resulting from the use of LED UV units or UV power supply units other than those recommended by Mimaki.

Safety Precautions

Caution

Protect from dust

- Use in a room as free of dust as possible. In poor conditions, set the refresh level to 2 or 3.
- Do not leave the media loaded in the machine overnight. Otherwise dust may accumulate on the media.
- Store the media to keep it dust-free. Attempting to wipe off dust from the media actually causes static electricity buildup and makes matters worse.
- Dust may cause ink droplets to fall from the print head onto the media unexpectedly during printing. If this occurs, clean the head. (☞ Refer to the corresponding printer operation manual.)

Some components must be replaced periodically

- The machine includes parts specified separately that must be replaced periodically. We therefore recommend taking out a maintenance contract.

Maintaining system level

- Keep the system level.

Maintenance liquid

- Store the maintenance liquid in a cool, dark place. Store it out of the reach of children.

Warning Labels

- Warning labels are affixed to the machine. Make sure you fully understand the details indicated on the various warning labels. If a warning label is illegible due to stains or has come off, purchase a new one from a dealer or our service office.

Anti freezing liquid

- Store the anti freezing liquid in a cool, dark place.
- Store it out of the reach of children.

Ink cartridges

- When an ink cartridge is moved from a cold place to a warm place, allow it to stand in the location where the machine is installed for at least three hours before using it.
- Open the cartridge just before installing. Allowing ink cartridges to stand opened for extended periods may prevent correct printing.
- Store the ink cartridges in a cool, dark place.
- Use ink cartridges up as quickly as possible after opening. Print quality will be reduced if the ink cartridge has been left unsealed for extended periods of time.

- Using ink other than the recommended ink may cause failures. Please note that the customer will be responsible for any repairs required following failure due to the use of unauthorized ink.
- Do not attempt to refill the cartridges with unauthorized ink.
- Do not hit or violently shake the ink cartridges. Doing so may result in ink leakage from the cartridge.

High temperature parts

- The LED UV unit becomes extremely hot. When carrying out maintenance, allow the LED UV unit to cool sufficiently after turning off.

- If you need to touch hot surfaces, use insulating gloves to protect your hands.

Caution

Cleaning

- There is a risk of current leakage if dust or debris builds up on conducting parts and insulating parts in the machine due to extended use. Clean the machine periodically.
- Do not use a compressed air blower to clean the machine. This will scatter the dust and debris, and may cause it to get inside conducting parts, causing malfunctioning. Be sure to use a vacuum cleaner to suck up and remove dust and debris.
- Avoid using in locations where water may splash on the machine. Using in such locations will greatly increase the risk of current leakage.
- If current leakage occurs, this may lead to electric shock or fire.
- Be sure to inspect periodically and replace the periodic replacement parts to prevent possible accidents.

Fire and smoke

- There is a risk of fire or smoke generation if flammable materials come into contact with hot parts such as the LED UV unit.
  There is a risk of fire or smoke generation if flammable materials are left under the LED UV device for even a few seconds.
- With extended use, there is a potential risk of fire or smoke generation due to current leakage or insulation degradation caused by dust and debris in the stabilizer and other components. Clean the machine regularly, and measure insulation resistance and replace components if they are deteriorating.
- With extended use, there is a potential risk of fire or smoke generation due to screws becoming loose on conductive components. Retighten such screws periodically.
- This machine is not explosion proof. There is a risk of explosion if the machine is used in hazardous atmospheres. Never use the machine in hazardous atmospheres.
- If you observe anything wrong with the machine, such as abnormal odors, smoke, and sparking, turn the power off immediately and contact our service office.

Installation Precautions

Caution

Exposed to direct sunlight

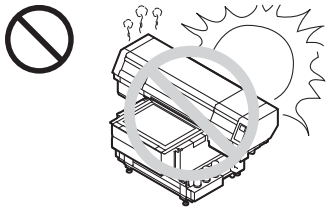

Places with uneven surfaces

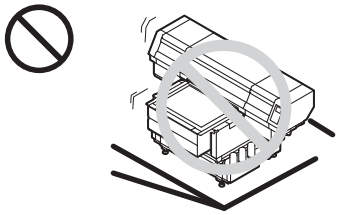

Exposed to significant changes in temperature or humidity

- Use the machine under the following environmental conditions:
  Operating environment:
  20 to 30°C
  35 to 65 % (Rh)

Where vibration occurs

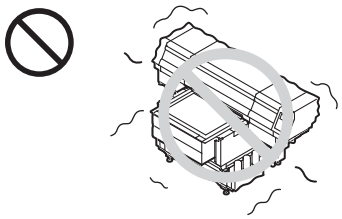

Exposed to direct air flow from an air conditioner or similar location

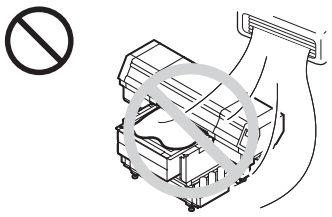

Exposed to naked flames

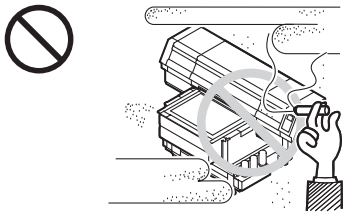

Warning Labels

The following warning labels are affixed to the Kebab HS system. Make sure you fully understand the details indicated on the various warning labels.
If a warning label is illegible due to stains or has come off, purchase a new one from a dealer or our service office.

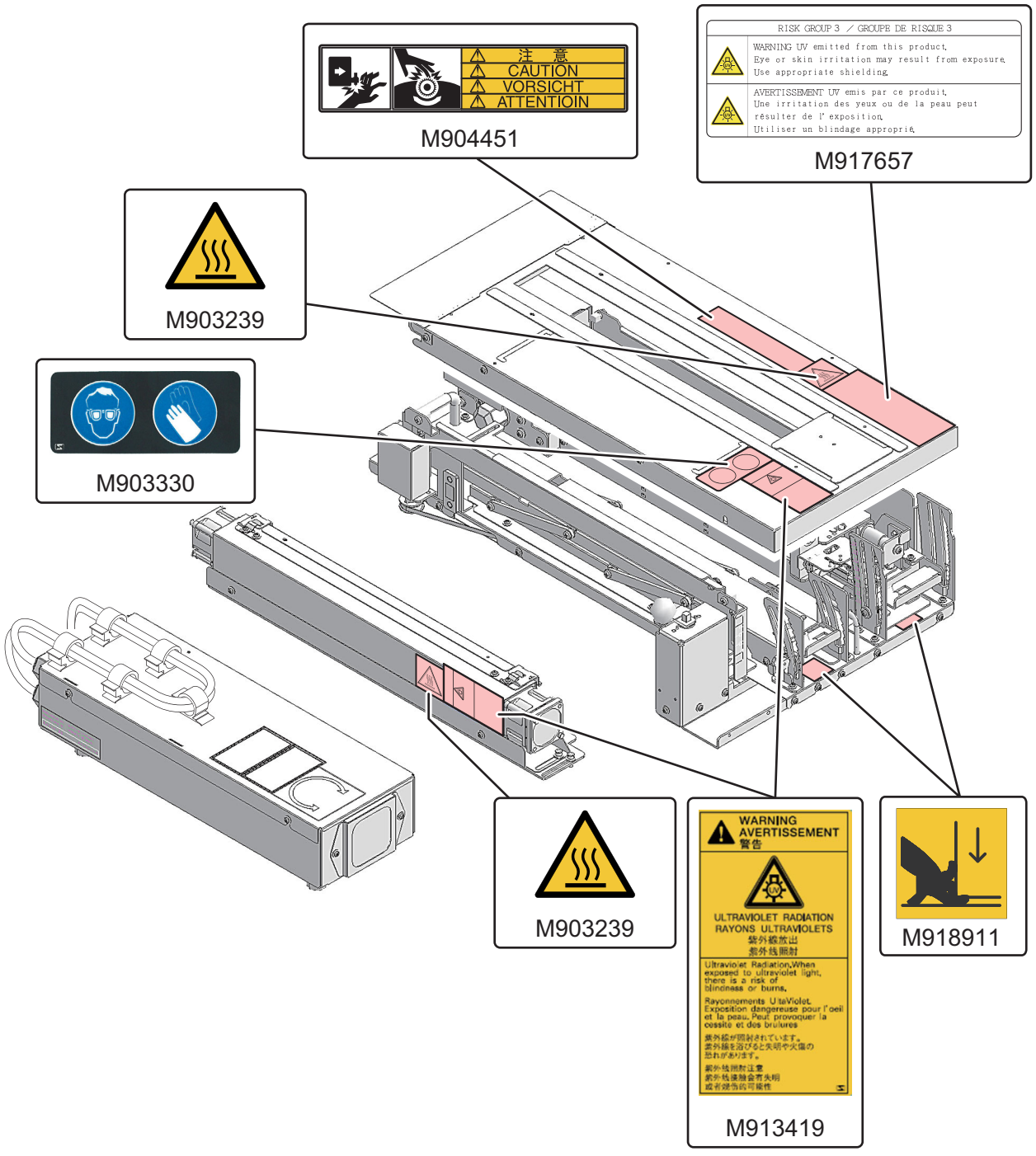
注 意
CAUTION
VORSICHT
ATTENTIOIN
M904451
RISK GROUP 3 / GROUPE DE RISQUE 3
WARNING UV emitted from this product.
Eye or skin irritation may result from exposure.
Use appropriate shielding.
AVERTISSEMENT UV emis par ce produit.
Une irritation des yeux ou de la peau peut résulter de l' exposition.
Utiliser un blindage approprié.
M917657
M903239
M903330
M903239
WARNING
AVERTISSEMENT
警告
ULTRAVIOLET RADIATION
RAYONS ULTRAVIOLETS
紫外线放出
紫外线照射
Ultraviolet Radiation.When exposed to ultraviolet light, there is a risk of blindness or burns.
Rayonnements UteViolet. Exposition dangereuse pour l'oeil et la peau. Peut provoquer la cessite et des brûlures
M913419
M918911

Part Names and Functions

Kebab HS System front view

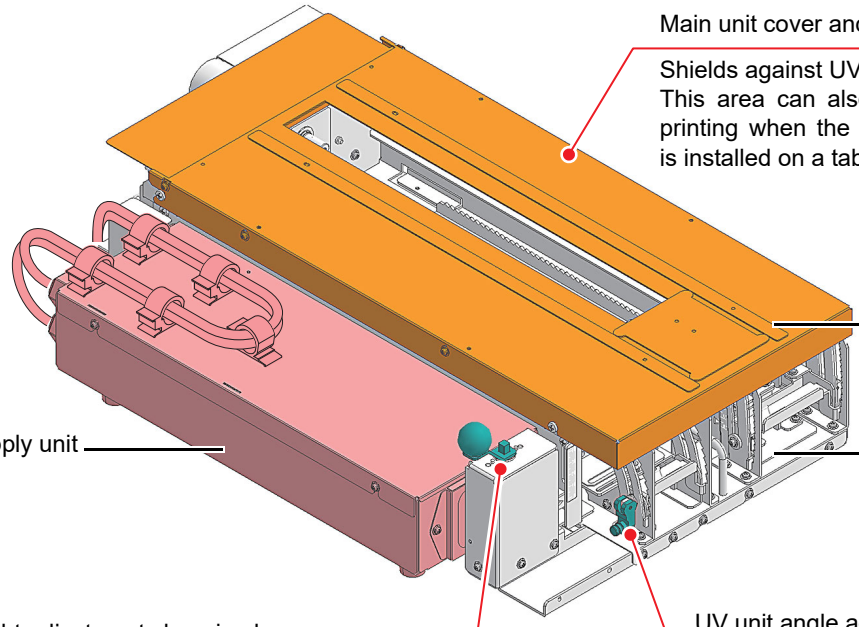

Main unit cover and test printing area

Shields against UV light leakage.
This area can also be used for test printing when the Kebab HS System is installed on a table.

Main unit cover

Power supply unit

Kebab main unit (work unit)

Cover height adjustment clamping lever

Adjusts the main unit cover height to suit the work diameter.

UV unit angle adjustment clamping lever

Adjusts the UV unit angle to suit the work.

Kebab HS System rear view

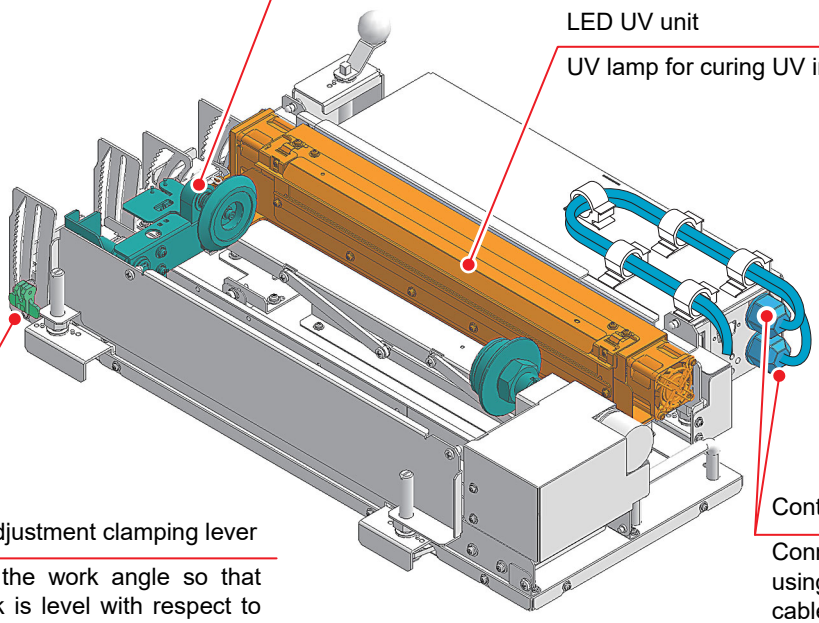

Slide chuck

Slide the chuck to clamp the work between the two chucks.

LED UV unit

UV lamp for curing UV ink.

Angle adjustment clamping lever

Adjusts the work angle so that the work is level with respect to the head when printing on work with differing front and rear diameters.

Control connector

Connects to the printer using the optional relay cable and D-sub cable.

Recommended Works

Recommended work shape

		Kebab HS System
Form		Cylindrical/tapered media (max. slope angle 7.5°)
Length	Max	280 mm*
	Min	30 mm
Diameter	Max	100 mm
	Min	50 mm
Maximum printing width		Max. 300 mm
Maximum work weight		Max. 3.0 kg

* When using the accessory chuck.

Important!

- When multiple overlay printing, printing may be affected by factors such as the work surface material, unevenness, and weight, resulting in discrepancies or color variations between each print. Be sure to perform a test print first to confirm that there are no problems with printing.
- There are limits to the maximum slope angle. Refer to the following graph for the relationship between the maximum diameter and maximum slope angle.

● Relationship between maximum diameter and maximum slope angle

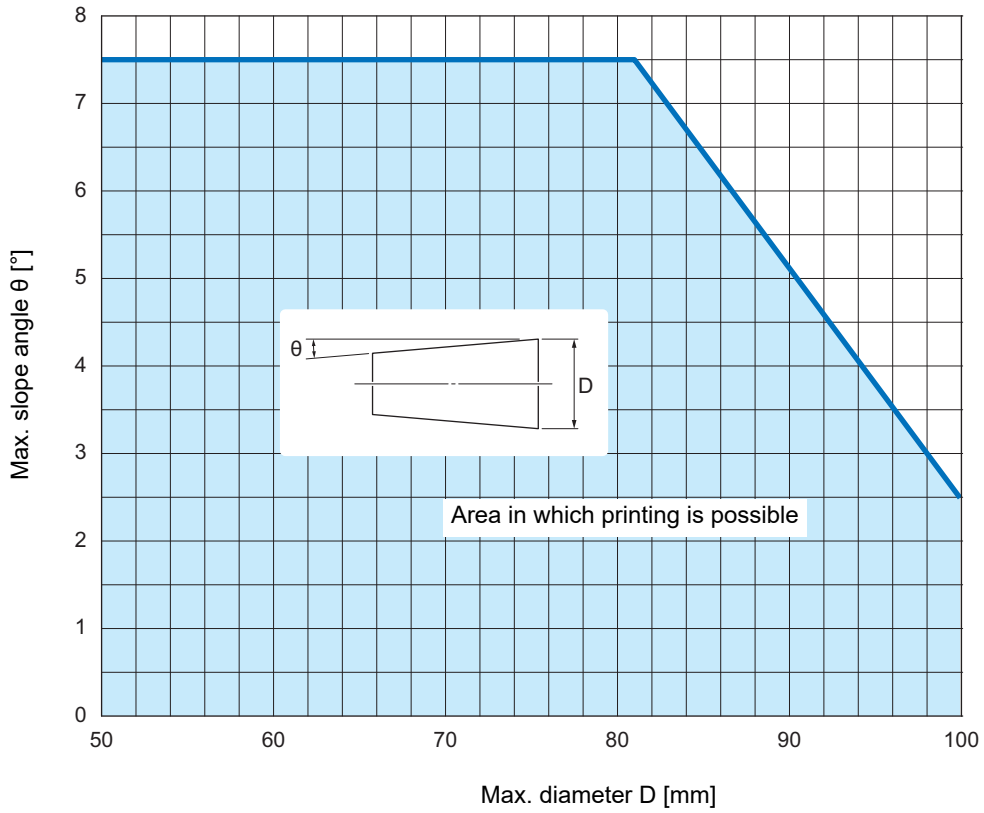

Caution

- Please note that print quality may be degraded if the work outside the recommended range are used.

Chuck specification

サプライ品番	品名	Supported flange size	Chuck-enabled inside diameter	External view
SPA-0373 (Main unit accessories)	Chuck60	φ54～85 (φ62 Standard equipment)	φ49～54	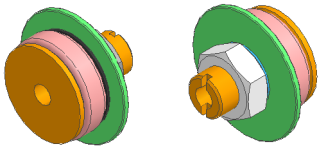
SPA-0374 (Supply)	Chuck70	φ66～85 (φ74 Standard equipment)	φ63～68	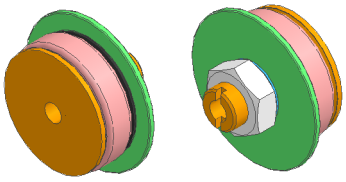
SPA-0375 (Main unit accessories)	Chuck75	φ81～85 (φ85 Standard equipment)	φ78～82	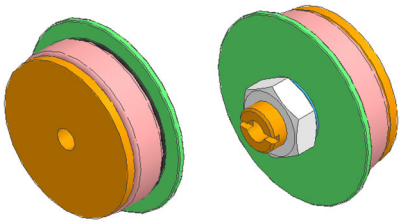
SPA-0376 (Main unit accessories)	Idler chuck 60	-	φ60～	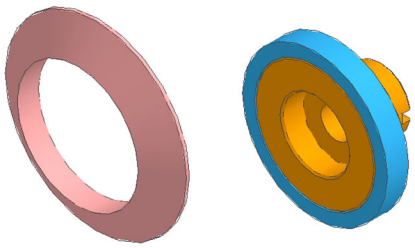
SPA-0377 (Supply)	Flange set	φ54 φ58 φ62 φ66 φ70 φ74 φ77 φ81 φ85	-	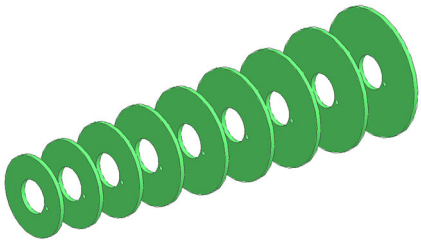

Attaching and Detaching the Kebab HS System

Caution

- The Kebab HS System is made up of three units:
  - Kebab main unit (work unit)
  - LED unit (power supply unit)
  - Main unit cover
- When transporting the system, always carry each unit separately.
  There is a risk of injury due to dropping if two or more units are carried together.

Kebab HS Compatible printers

The Kebab HS System can be used in conjunction with the following printers:

System	Compatible printer
Kebab HS	UJF-3042/6042MkIIe
	UJF-7151 plusII / UJF-7151 plusIIe
	UJF200-3042 / 6042

Important!

- The Kebab HS system and the ionizer (optional) cannot be used together.
- The ionizer will be disabled if the Kebab HS system is recognized. (The ionizer does not need to be removed.

Attaching the Kebab HS System to a printer

Important!

- Before attaching the Kebab HS system, be sure to check the following adjustments on the printer.
  (The following adjustments cannot be checked during attachment of the Kebab HS system.)
  - [SETUP] – [FEED COMP.]
  - [SETUP] – [Misregistration adjust]

  Please refer to the instruction manual for each model for adjustment procedures.
  - "Setting of Media Correction"
  - "Setting of the Misregistration adjust"

Caution

- Be sure to attach the Kebab HS System using the following procedure. Failure to observe these instructions may result in malfunctions.

The procedure here is described for the UJF-6042MkIIe and UJF200-6042.

1 Turn on the main power on the printer.

Important!

- Check to confirm that the Kebab HS System is not connected to the printer before turning on.

2 Press the MENU key in local mode.

3 Press ▲ ▼ to select [Environment Setting] for the UJF200-3042/6042,or [MACHINE SETUP] for other models, and press the ENTER key.



4 Press ▲ ▼, then select [SET OPTION JIG].



5 Select [Kebab HS], then press the ENTER key.



6 When the attachment confirmation screen is displayed, press the ENTER key.

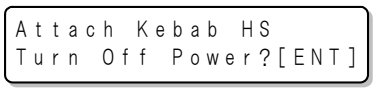

- The sub-power supply automatically turns off.
- The table automatically lowers to the position where the KebabHS can be installed.

7 Turn off the main power on the printer main unit.

- For the UJF-7151 plusII / UJF-7151 plusIIe without the Full Cover Option, go to Step 13.

8 Open the front cover.

- For the UJF-7151 plusII / UJF-7151 plusIIe with the Full Cover Option and the UJF-200-3042 / 6042, go to Step 13.

9 Disconnect the cable on the table underside from the main unit.

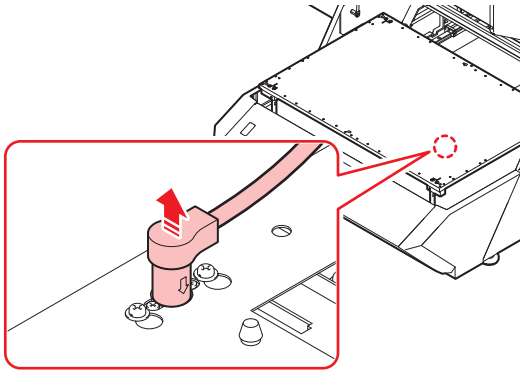

10 Lift up the table to remove it.

- The UJF200 is not equipped with a support shaft. This procedure is not required.

Important!

- Hold both sides of the table and lift it vertically upward.

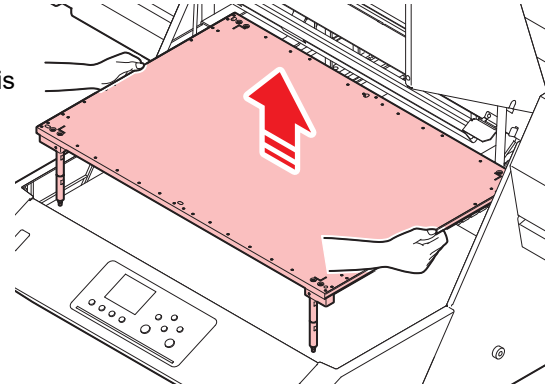

11 Remove the table support shafts.

- The UJF200 is not equipped with a support shaft. This procedure is not required.

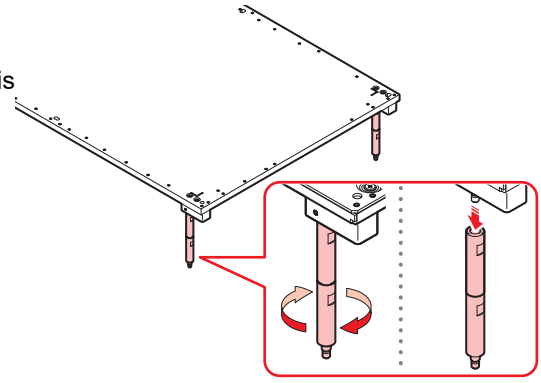

12 Remove the connector cover.

- In the center of the printer for the UJF-3042MkIIe , UJF-6042MkIIe and UJF200-3042 / 6042
- For the UJF200-3042 / 6042, remove the connector cap and proceed to step 16.

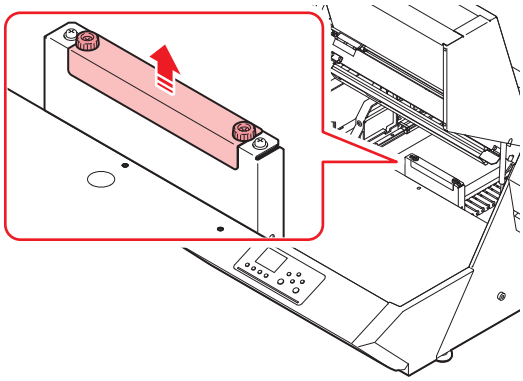

- At the front of the printer for the UJF-7151 plusII / UJF-7151 plusIIe
- For the UJF-7151 plusII / UJF-7151 plusIIe equipped with the Full Cover Option, proceed to Step 16 after that.

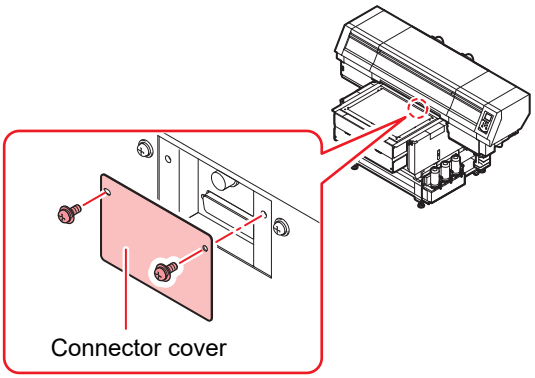

13 Reattach the table.

• For UJF200, this procedure is not required.

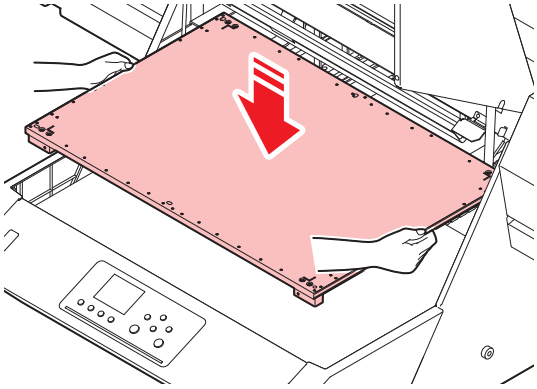

14 Reconnect the cable on the table underside to the printer main unit.

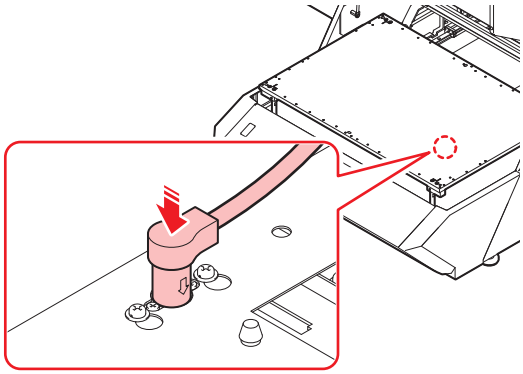

15 Attach the positioning plates.

• Use the plastic head screws provided to attach the positioning plates.

• UJF-3042MkIIe, UJF200-3042 (For honeycomb panel)

(1) Align the protrusions on the positioning plates with the holes in the table.

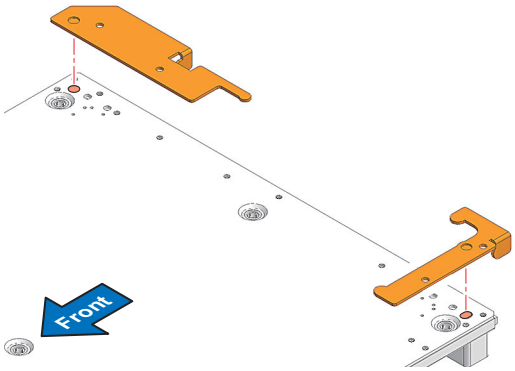

(2) Use the plastic head screws provided to temporarily secure the positioning plates.

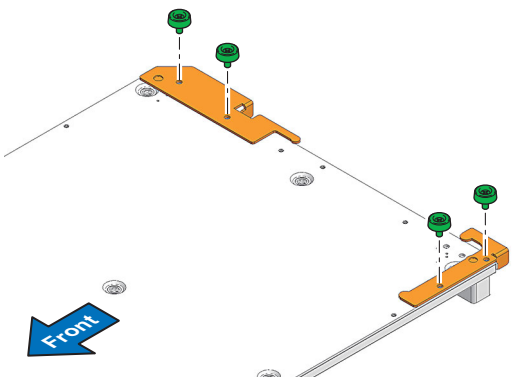

(3) Fully tighten the plastic head screws while pushing the positioning plates in the direction of the arrows.

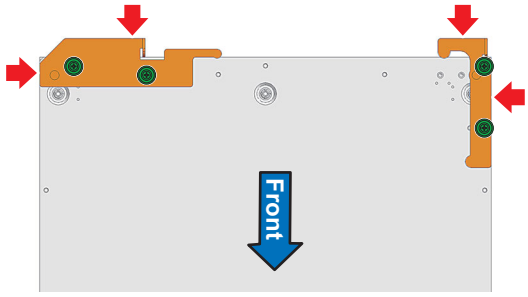

• UJF-3042MkIIe , UJF200-3042 (For metal panel)

(1) Align the protrusions on the positioning plates with the holes in the table.

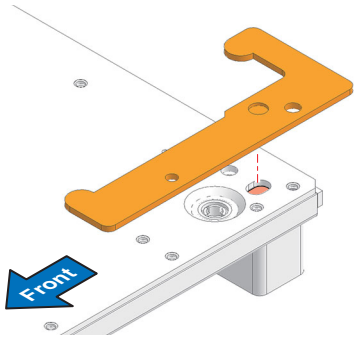

(2) Use the plastic head screws provided to temporarily secure the positioning plates.

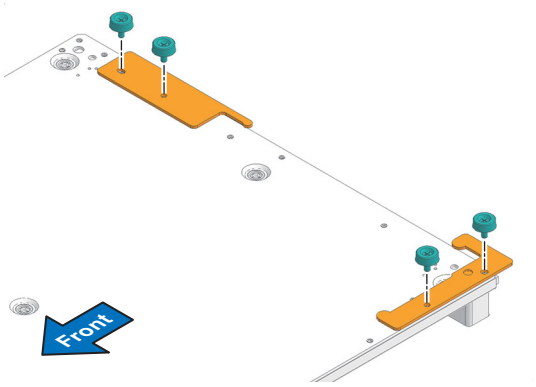

(3) Fully tighten the plastic head screws while pushing the positioning plates in the direction of the arrows.

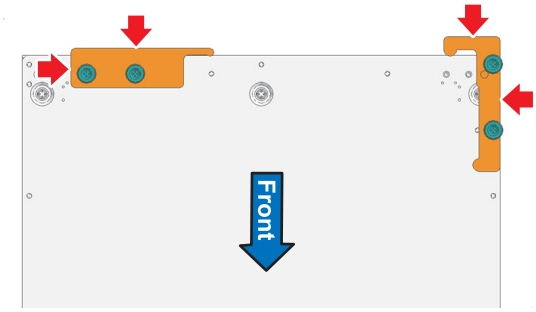

• UJF-6042MkII e, UJF200-6042

(1) Align the protrusions on the positioning plates with the holes in the table.

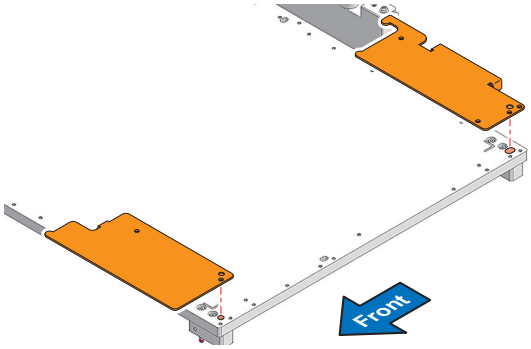

(2) Use the plastic head screws provided to temporarily secure the positioning plates.

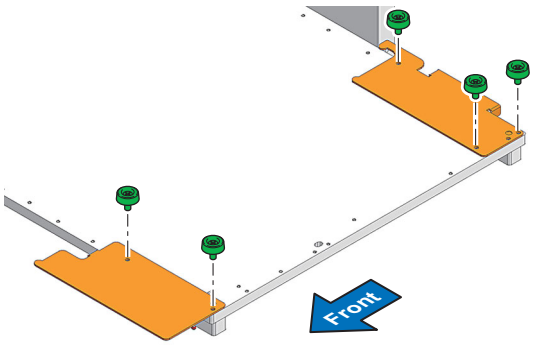

(3) Fully tighten the plastic head screws while pushing the positioning plates in the direction of the arrows.

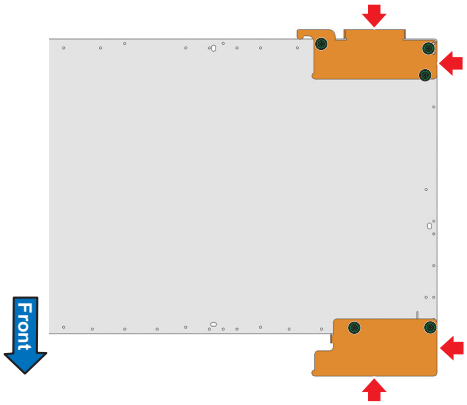

• UJF-7151 plusII / UJF-7151 plusIIe

(1) Align the protrusions on the positioning plates with the holes in the table.

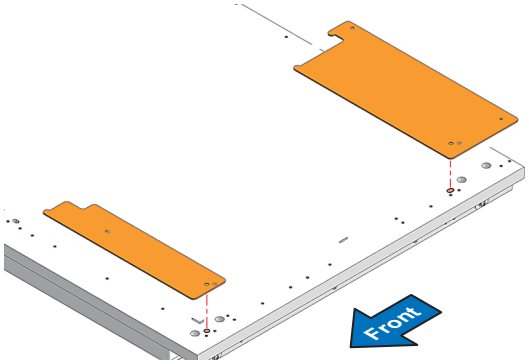

(2) Use the plastic head screws provided to temporarily secure the positioning plates.

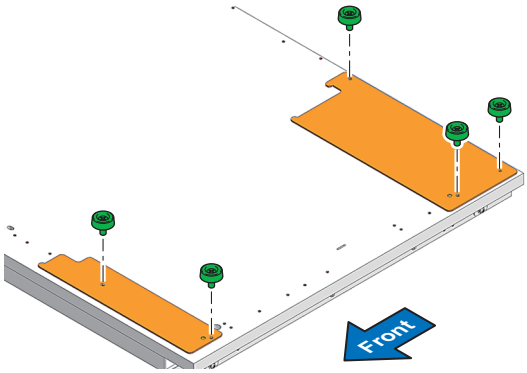

(3) Fully tighten the plastic head screws while pushing the positioning plates in the direction of the arrows.

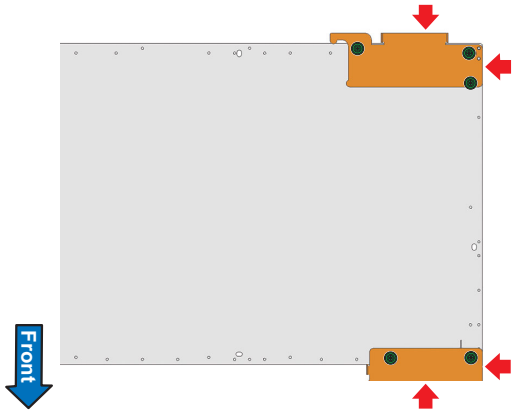

16 Attaching the Kebab HS System

(1) Place the Kebab main unit on the table.

Important!

- For the UJF-200-3042, place the Kebab unit on the table at an angle as shown in the figure, with the front of the unit protruding beyond the edge of the table. Next, proceed to step (4), as the LED unit must be installed first.

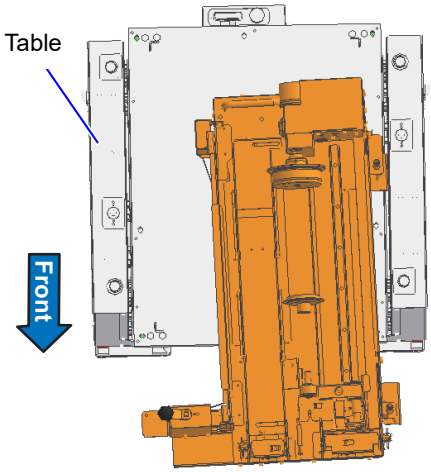

Lifting locations

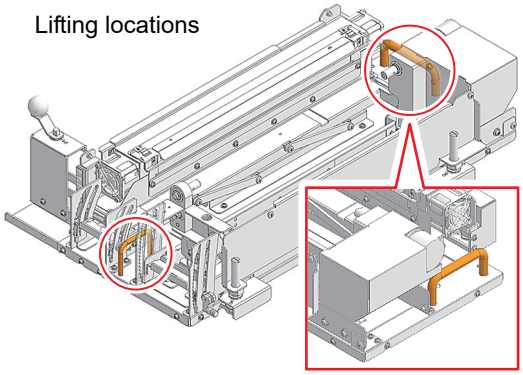

(2) Push the Kebab main unit up flush against the positioning plates.

- Push toward the rear right of the table.

UJF-3042MkII e , UJF200-3042

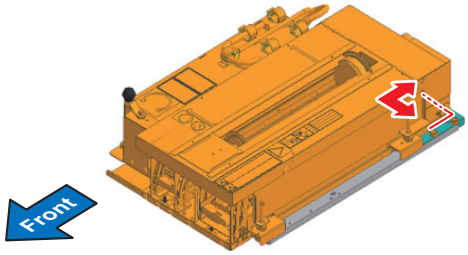

UJF-6042MkII e, UJF200-6042

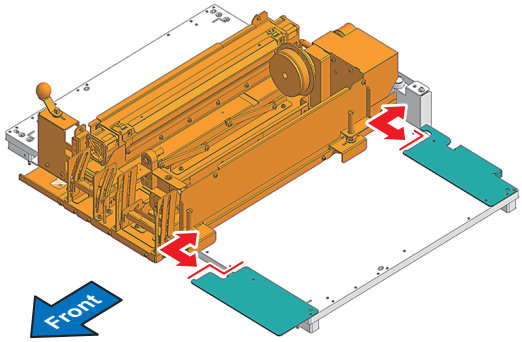

(3) Use the plastic head screws provided to attach the clamping plates.

• UJF-3042MkIIe, UJF200-3042

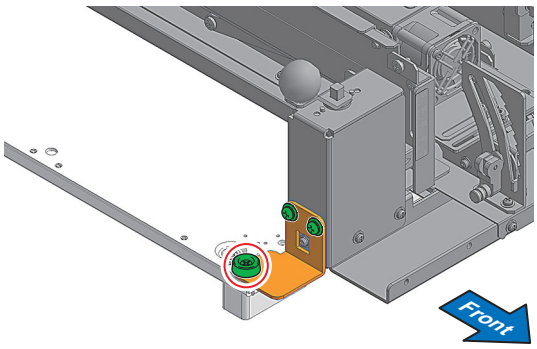

• Using a short screwdriver, securely tighten the screws.

• UJF-6042MkIIe, UJF200-6042, UJF-7151 plusII / UJF-7151 plusIIe

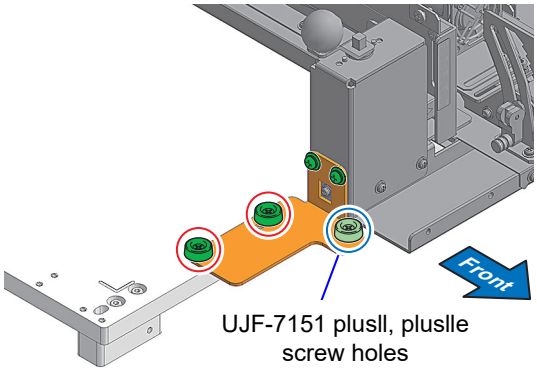

Important!

- Check to confirm that there is no gap between the Kebab main unit and the table.
- If there is a gap, perform the following:
  - Press down lightly on the Kebab main unit from above.
  - Check to confirm that there is no debris on the table.
  - Check to confirm that there is no debris on the underside of the Kebab main unit.

(4) Attaching the LED unit.

• Attach the PCB box to the magnets on the side of the Kebab main unit.

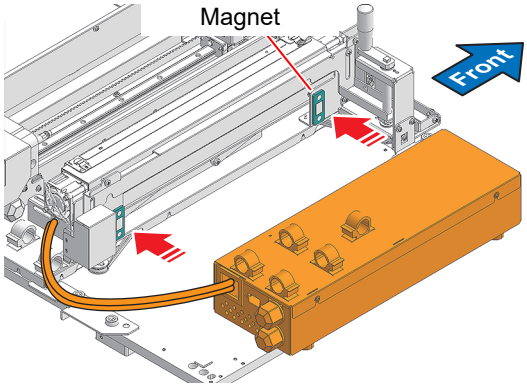

Important!

- Make sure that the PCB box is securely attached to the side of the unit.
- Be careful not to allow the PCB box to interfere with the cover on the side of the table.
- For the UJF-200-3042, position the Kebab unit at an angle with part of the unit extending beyond the edge of the table as shown in the figure below, and secure sufficient space for installing the PCB Box and UV lamp.

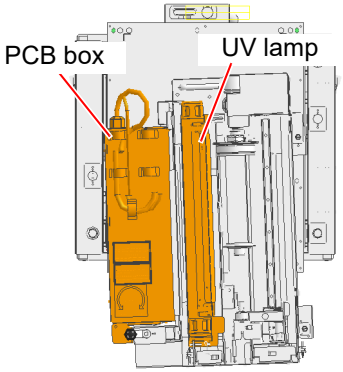

• Attach the UV lamp to the Kebab main unit.

Engage the slot on the UV lamp with the screw to temporarily secure it in place.

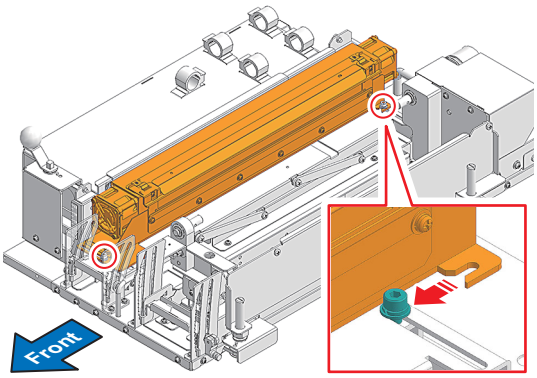

Important!

• For the UJF-200-3042, after installing the LED unit, return to steps (2) and (3) to secure the Kebab unit. Then proceed to step (5).

(5) Connect the cable to the PCB box.

• Connect the cable from the Kebab main unit to the rear of the PCB box.

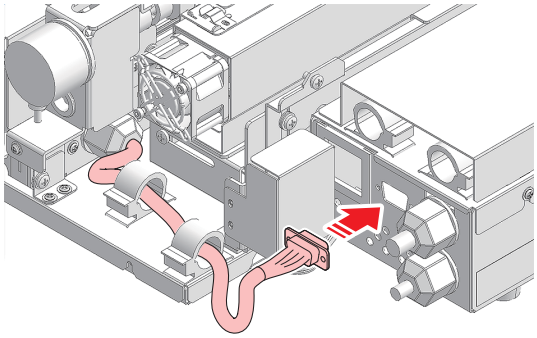

17 Connect the optional relay cable and D-sub cable to the printer main unit.

Caution

• Be sure to turn off the main power to the printer main unit before connecting the cables.
• Connect the cables securely to ensure that they do not become disconnected while the printer is operating.
• During installation, be careful not to hit your head on the corners of the open/close cover.

• UJF-3042MkIIe/UJF-6042MkIIe, UJF200-3042 / 6042

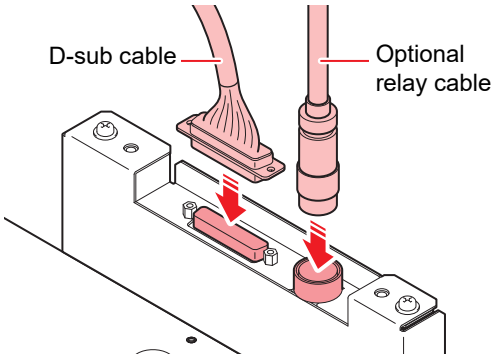

• UJF-7151 plusII / UJF-7151 plusIIe

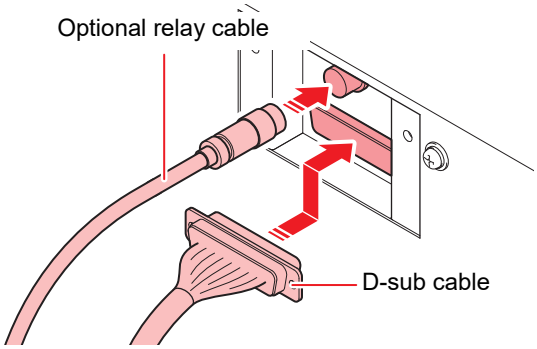

• When inserting the optional relay cable connector, align with the slot in the connector on the main unit.

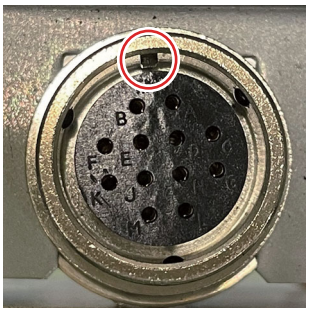
Main unit connector

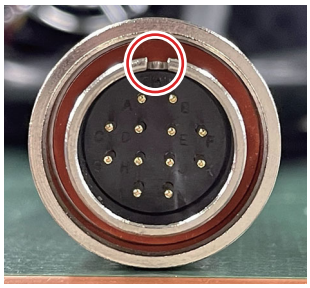
Optional relay cable connector

Important!

- Check to confirm that the cable is not touching the carriage.
- Make sure that the cable is not pinched or caught between the underside of the table and any surrounding components.
- If the cable contacts, becomes pinched by, or is caught between components, remove the clamp and adjust the cable length.

: D-sub cable
: Optional relay cable

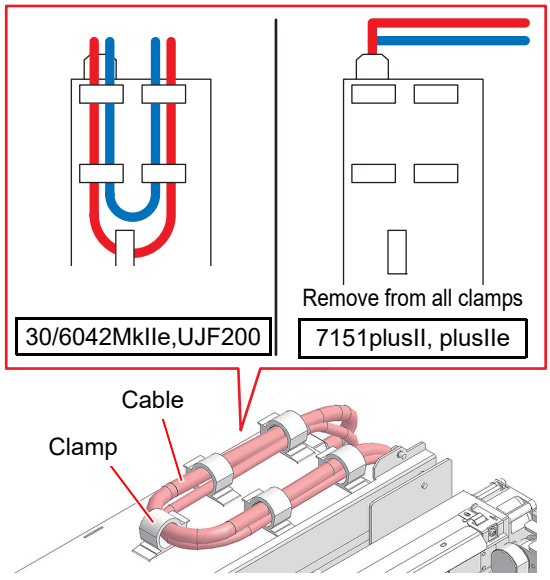

18 Turn on the power to the printer.

• At startup, the printer automatically detects the Kebab HS System.

Detaching the Kebab HS System from a printer

The procedure for detaching the Kebab HS System is as follows:

1 Press the MENU key in local mode.

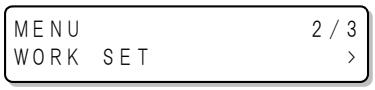

Important!

- Take care not to detach the Kebab HS System from the main unit before changing the settings using [SET OPTION JIG].

2 Press the ENTER key in [MACHINE SETUP].



3 Press ▲ ▼, then select [SET OPTION JIG].



4 When the detachment confirmation screen is displayed, press the ENTER key.

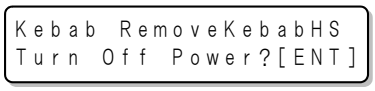

- The sub-power supply automatically turns off.

5 Turn off the main power on the printer main unit.

- UJF-7151 plusII / UJF-7151 plusIIe: Proceed to step 7.
  However, proceed to step 6 if the full cover option is fitted.

6 Open the front cover.

7 Disconnect the optional relay cable and D-sub cable from the printer main unit.

Caution

- Be sure to turn off the main power to the printer main unit before disconnecting the cables.

- UJF-3042MkIIe/UJF-6042MkIIe, UJF200-3042 / 6042

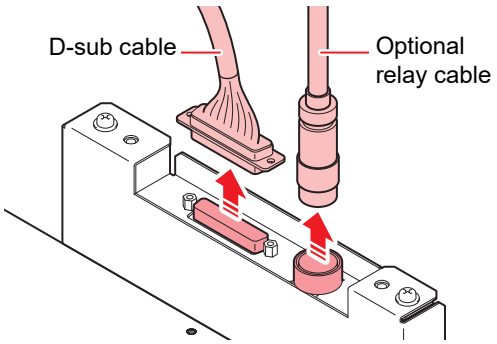

• UJF-7151 plusII / UJF-7151 plusIIe

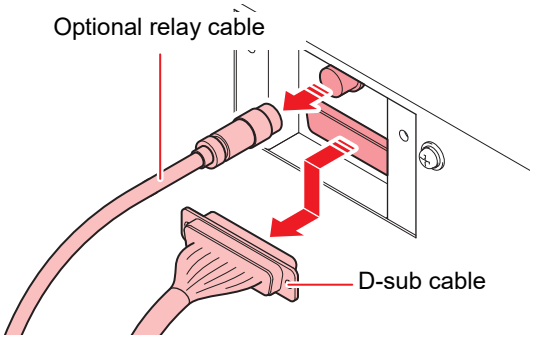

8 Detach the Kebab HS System

• Remove the plastic head screws on the clamping plates, then remove the Kebab HS System.

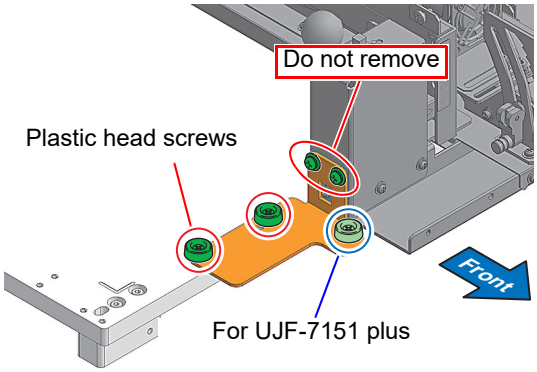

9 Remove the positioning plates from the table.

• For the UJF-3042MkIIe and UJF200-3042 proceed to step 11.
• For the UJF-7151 plusII / UJF-7151 plusIIe, proceed to step 13.

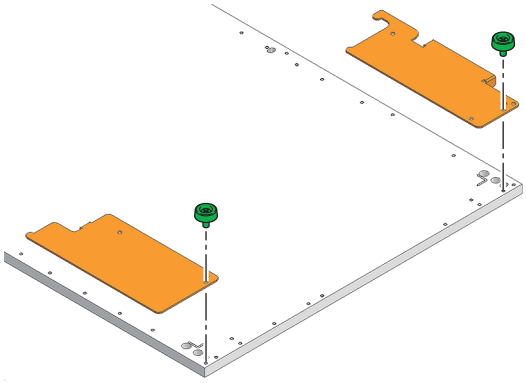

10 Disconnect the cable on the table underside from the main unit.

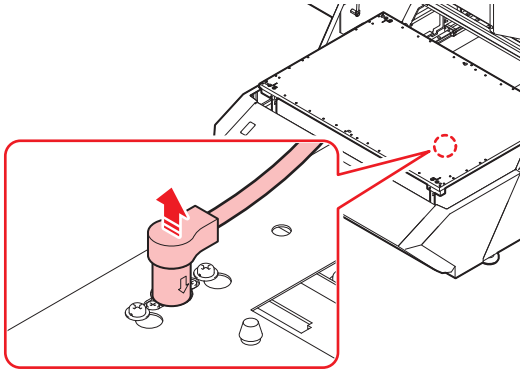

11 Lift up the table to remove it.

• The UJF200 is not equipped with a support shaft. This procedure is not required.

Important! • Hold both sides of the table and lift it vertically upward.

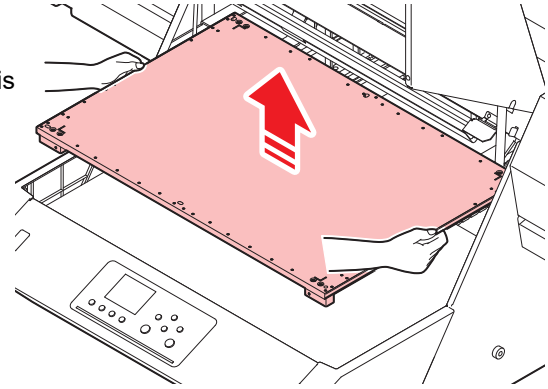

12 Attach the support shafts to the table.

• The UJF200 is not equipped with a support shaft. This procedure is not required.

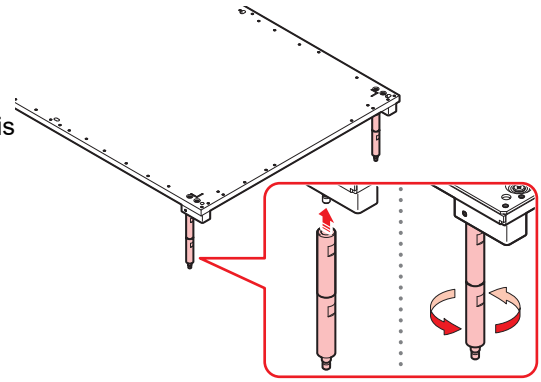

13 Attach the connector cover.

• UJF-3042MkIIe/UJF-6042MkIIe , UJF200-3042/6042
• For the UJF200-3042 / 6042, after installing the connector cap, proceed to step 15.

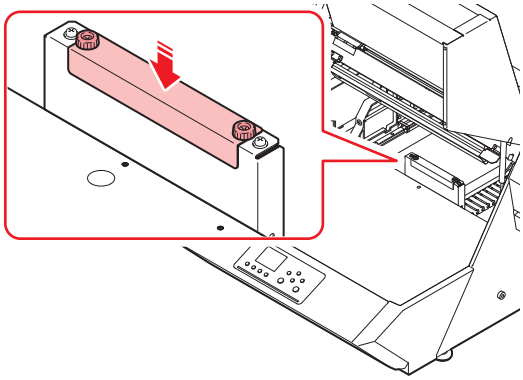

• UJF-7151 plusII / UJF-7151 plusIIe
Proceed to step 16 after attaching.
However, if the full cover option is fitted, proceed to step 15.

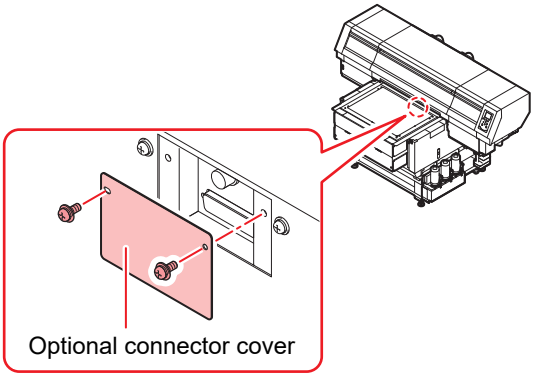

14 Reattach the table.

• For UJF200, this procedure is not required.

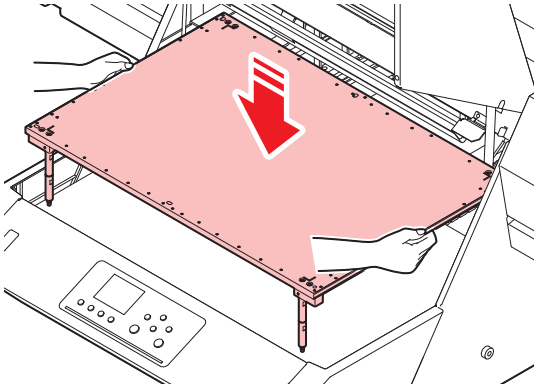

15 Close the front cover.

16 Turn on the power to the printer.

Setting Up the Work

Set the work in the jig.
The Kebab HS System is capable of printing work with differing front and rear diameters.
The procedure here is described for cylindrical work.

Caution

- The surface of the work may be hot immediately after printing. Take care not to touch the work until it has sufficiently cooled.

Setting up the work for the first time after starting up/Changing the work type

1 Press the FUNC1 key in local mode.

2 Press ▲ ▼ to select [WORK SET].

- The next screen is not displayed if the front cover is closed.
- The screen on the right appears when the work is not set for the first time after starting up.
  Press the FUNC1 (NO) key.

```
MENU                    1/3
WORK SET                >
```

[Setting the work except for the first time]

```
WORK SET
Use same work?
Work Type: Cylinder
Transparency: Transparent
DIAMETER: 100.0mm
Total Work Length: 30.0mm
```

3 Open the front cover, then press the ENTER key.

- The table moves, and the Kebab HS unit moves forward.
- With the UJF-7151 plusII / UJF-7151 plusIIe (without full cover option) the Kebab HS unit moves forward automatically.

4 Press ▲ ▼ to select the work type.

- Cylinder
- Taper

```
WORK SET
Work Type: Cylinder
```

5 Press ▲ ▼ to select the media transparency.

- Opaque
- Transparent

Important!

- When printing on transparent media, place black fabric inside to prevent light reflection.

```
WORK SET
Work Transparency: Opaque
```

6 Measure and input diameter of work to be printed.

- Measure using calipers, then enter the precise values.
- Use the JOG keys to enter the work diameter.
  ◀ ▶: Change 10 mm at a time
  ▲ ▼: Change 0.1 mm at a time
- When [Cylinder] is selected for the work type:

For [Cylinder]:

```
WORK SET
DIAMETER D = 100.0mm
```

- Input range: 50.0 to 100.0 mm (☞ P.10)

- When [Taper] is selected for the work type:
  Enter the large and small diameter values.
  - Large diameter input range: 50.0 to 100.0 mm (☞ P.10)
  - Small diameter input range: 50.0 to large diameter value (☞ P.10)

For [Taper]:

```
WORK SET
Large Diameter:  100.0mm
Small Diameter:   90.0mm
```

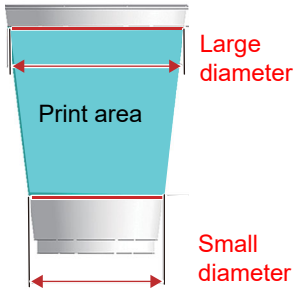

7 Measure and input length of work to be printed.

```
WORK SET
Total Work Length: 30.0mm
```

- Use the JOG keys to enter the work length.
  ◀ ▶: Change 10 mm at a time
  ▲ ▼: Change 0.1 mm at a time
- Input range: 30.0 to 300.0 mm
- When [Taper] is selected for the work type, enter the vertical distance between the large and small diameters of the print area.

For [Taper]:

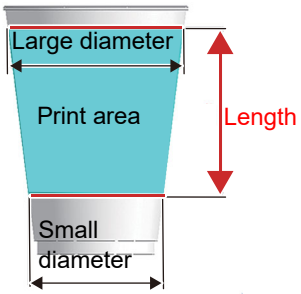

- When [Taper] is selected for the work type:
  The screen on the right appears if the system determines that the work cannot be set based on the large diameter, small diameter, and length entered.
  Press [ENTER] to return to step 6.

```
WORK SET
Non-standard media
PRESS <ENTER> KEY
```

8 Press the ENTER key.

9 Attach the handle.

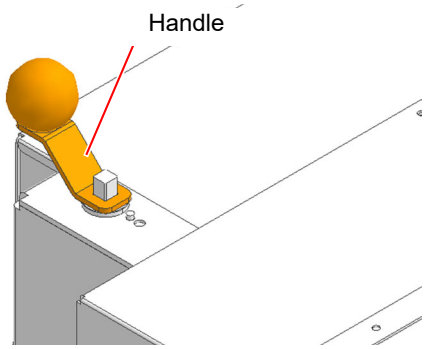

10 Move the cover and UV lamp out of the way, then press the ENTER key.

(1) Using the height indicated on the panel as a reference, turn the handle to move the cover.

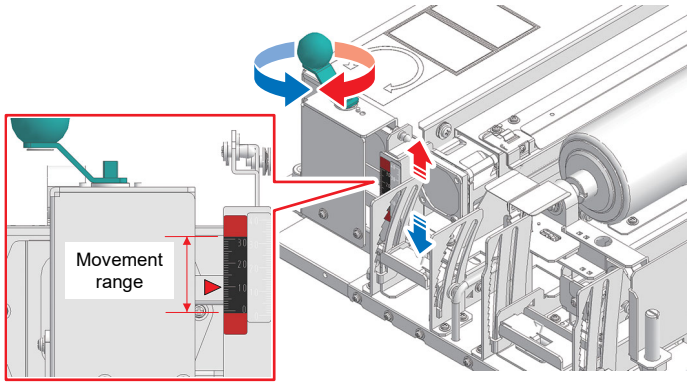

(2) Move the UV lamp.

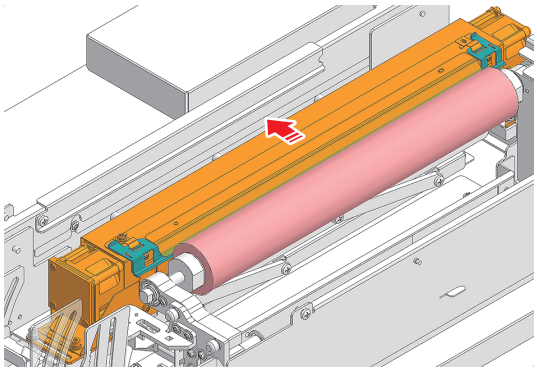

11 Mount the chuck, then press the ENTER key.

- Clamp the drive chuck by tightening the hexagonal nut (M20). (The wrench used to tighten the hexagonal nut is provided.)
- Clamp the drive and idler chucks to the spindle using the hex socket bolt (M4). (The hex wrench used to tighten the bolt is provided.)

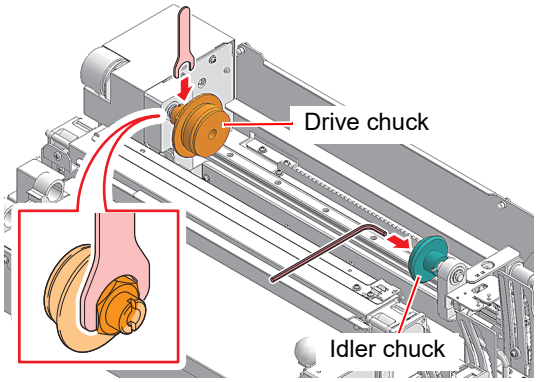

Important!

- The customer should provide chucks to suit the work shape.
  “Creating Chucks” on page 38
- The chucks should be made of black material to avoid reflecting light.

12 Set up the work, then press the ENTER key.

(1) Set up a work.
(2) Push the slide chuck up against the work.
(3) Push the slide chuck to compress the slide spring.

Important! • Compressing the spring turns on the work sensor.

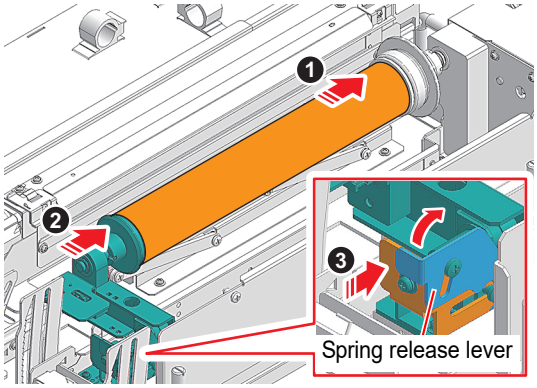

13 Check to confirm that the work is not eccentric, then press the ENTER key.

Important! • Press the [FUNCTION2] key to rotate the work. Check to confirm that the work is not eccentric.

14 Adjust the taper angle, then press the ENTER key.

• When [Cylinder] is selected for the work type:
Taper angle adjustment is not required (at lowest point).
Skip this screen.

• When [Taper] is selected for the work type:

(1) Refer to the angle displayed on the panel, check the scale, and adjust the angle of the lower frame face by lowering the one-way lever while aligning it with the arrow.
(2) Lock using the lever handle.
* The handle can be turned to fine-adjust.

Important! • Use a level to adjust the work until it is level.

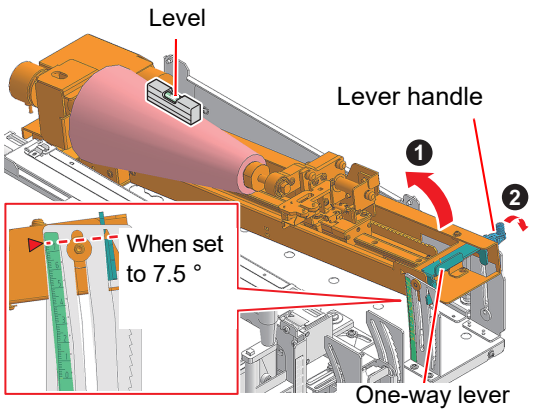

• In the case of UJF-7151 plusII / UJF-7151 plusIIe, since there is a cover in front of it and your hand cannot reach it, slowly move the lever handle up and down while pressing and releasing the one-way lever lock from above.

• Press near the corner of the one-way lever to easily release the lock.

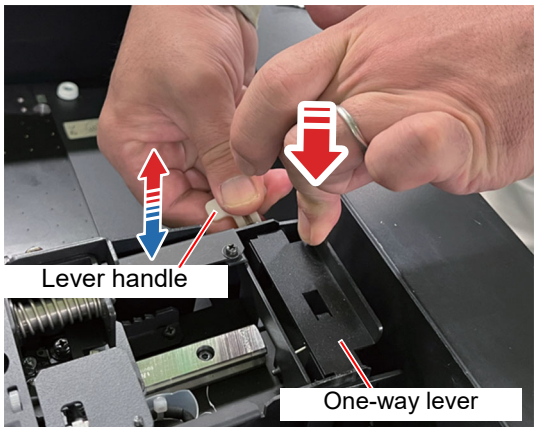

15 Adjust the UV lamp height, then press the ENTER key.

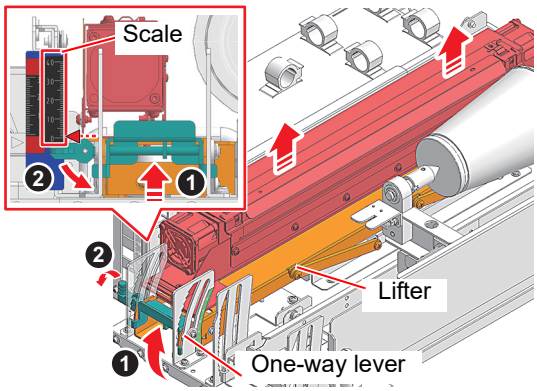

- When [Cylinder] is selected for the work type, taper angle adjustment is not required (at lowest point). Skip this screen.

- When [Taper] is selected for the work type:

  (1) Refer to the height displayed on the panel, check the scale, and adjust the height of the lifter upper face by lowering the one-way lever while aligning it with the arrow.
  (2) Lock using the lever handle.
  * The handle can be turned to fine-adjust.

- In the case of UJF-7151 plusII / UJF-7151 plusIIe], there is a cover in front of it and your hand cannot reach it, so adjust the height as shown below.

(1) To raise the UV lamp
Hold the part indicated by the arrow and raise the lamp slowly..

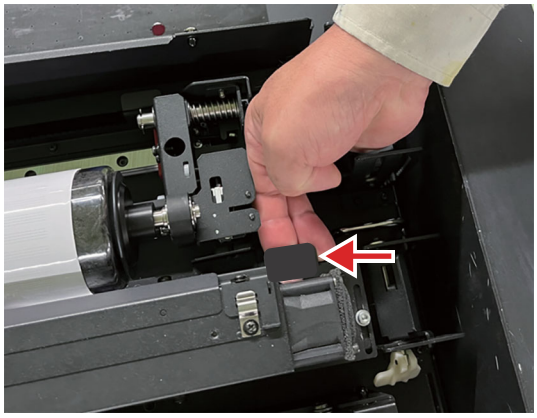

(2) To lower the UV lamp
Slowly lower the UV lamp while pressing and releasing the lock on the one-way lever at the front from above.

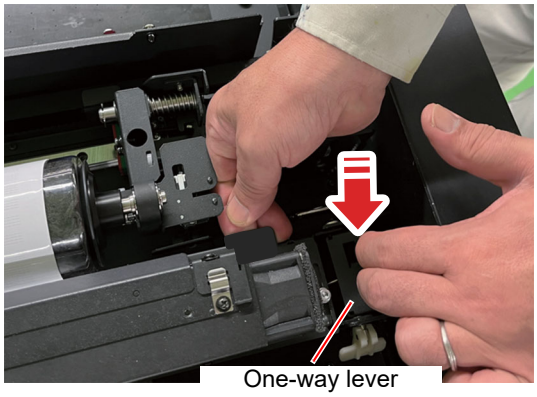

16 Mount the light-blocking plate, then press the ENTER key.

• Mount the light-blocking plate on the UV lamp according to the work printing range.

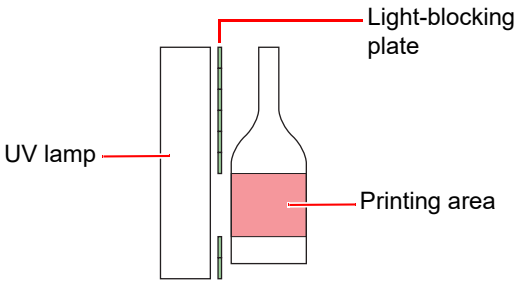

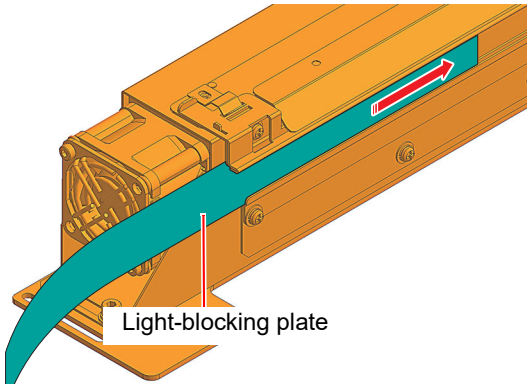

Caution

• The edges of the light-blocking plate are sharp. Be sure to wear gloves to avoid the risk of injury.

17 Move the UV lamp close to the work, then press the ENTER key.

(1) Slide the protruding bar.
(2) Position the UV lamp so that it is lightly pressing against the work, then tighten the screws.
(3) Move the protruding bar back to its original position.
(4) The gap between the LED shade and the work will be 1 mm.

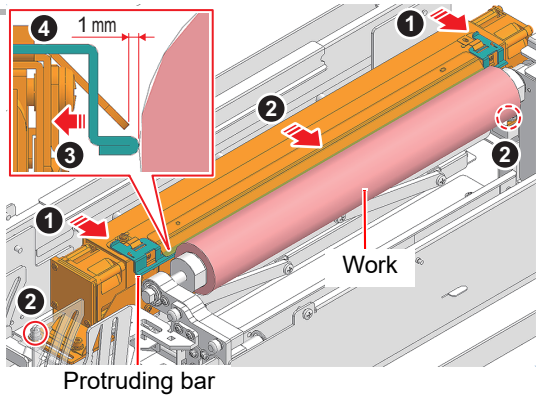

Important!

• Press the [FUNCTION2] key to rotate the work. Check to confirm that the work does not touch the UV lamp.

18 Attach the cover and magnetic sheet.

(1) Attach the cover aligning the two slots with the screws on the slider.

Important!

• Check to confirm that the rear cover is lowered.

(2) Attach the magnetic sheet.
The magnetic sheet should be provided by the customer to suit the work.

• ☞ “Modifying the UV Light-Blocking Cover and Measuring Light Levels” on page 41

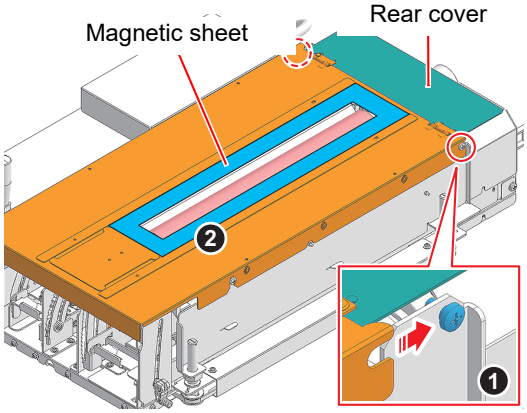

19 Adjust the cover height, then press the ENTER key.

(1) Refer to the height displayed on the panel, and adjust the cover height by turning the handle.



- Adjust so that the work is at a height approximately 0 to 2 mm above the magnetic sheet.

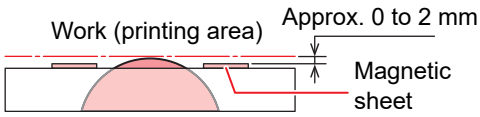



- Do not turn the handle beyond the red areas at the top and bottom of the scale. Doing so may damage the machine.

(2) Check to confirm that the work is not touching the cover or magnetic sheet.

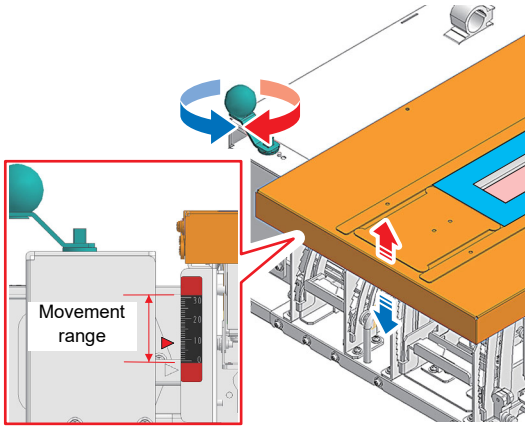

20 Remove the handle.

- After adjusting the cover height, remove the previously installed handle.



- If the handle is not removed, it may interfere with the head and damage it.

21 Mount the light-blocking cover.

- Push the light-blocking cover up against the front of the work to shield parts other than the area being printed.



- Use the screen plate and magnetic sheet to shield the light as necessary.
- Once shaded, [PRESS <ENTER> KEY] appears.

- If [PRESS <ENTER> KEY] is not displayed, press the slide spring in again.

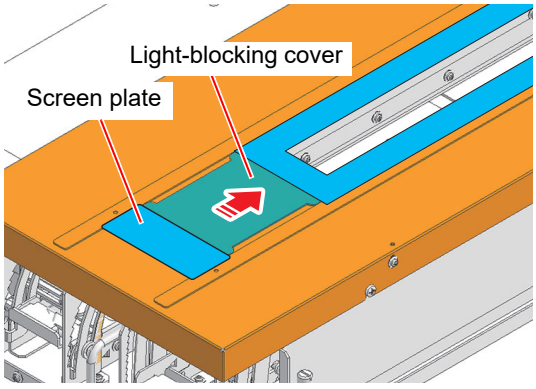

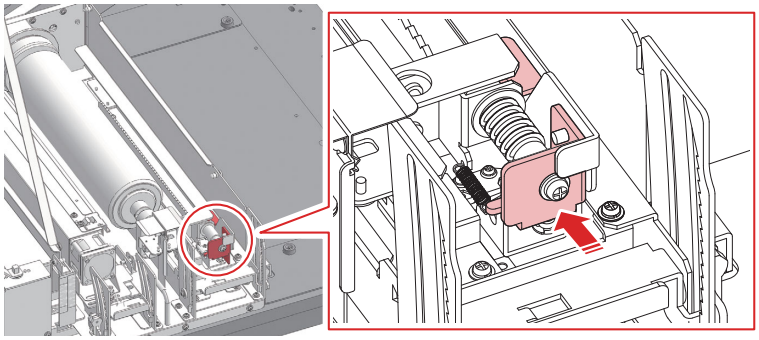

22 Press the ENTER key.

23 Select work checking.

- A screen appears for selecting whether or not to check the work setup.
  - To check: Proceed to step 24.
  - If not checked: Work setup is complete.

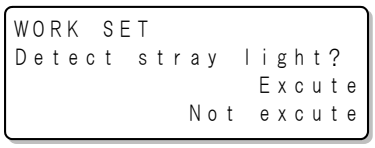

24 Wear long-sleeved clothing, and the UV light-shielding goggles and gloves that come with the UV printer.



25 Turn on the UV lamp, and check to confirm that no UV light leaks from gaps between the work set.

- The measurement procedure is as follows:
  ☞ “Measuring UV light leakage after setting up the work” on page 45
- If there is no problem with the measurement results, press the [ENTER] key.
  Work setup is complete.
- If there is a problem with the measurement results, press the [END] key.
  The screen on the right appears if the [END] key is pressed.
  Press [ENTER], return to step 12, then reset the work.

  Check the following points before resetting the work:
  - Is the magnetic sheet correctly set?
  - Is the cover height correct for the work diameter?
  - Is the work set concentrically?



When using the same work as previously

1 Press ▲ ▼ to select [WORK SET].

- The next screen is not displayed if the front cover is closed.
- A screen appears for confirming whether or not the same work is to be used.
  Press the FUNC3 (YES) key.

```
WORK SET
Use same work?
Work Type: Cylinder
Transparency:Transparent
DIAMETER: 100.0mm
Total Work Length:30.0mm
```

2 Set up the work, then check to confirm that it is not eccentric.

Important!

- Press the [FUNCTION2] key to rotate the work. Check to confirm that the work is not eccentric.

3 Select whether or not to detect stray light.

- A screen appears for selecting whether or not to detect stray light.
  * Stray light detection involves turning on the UV lamp and using a light meter to check whether any light is leaking from gaps between the cover.
  - To check: Proceed to step 4.
  - If not checked: Work setup is complete.

```
Repeat Set
Detect stray light?
                Excute
            Not excute
```

4 Wear long-sleeved clothing, and the UV light-shielding goggles and gloves that come with the UV printer.

5 Turn on the UV lamp, and check to confirm that no UV light leaks from gaps between the work set.

- The measurement procedure is as follows:
  ☞ “Measuring UV light leakage after setting up the work” on page 45
- If there is no problem with the measurement results, press the [ENTER] key.
  Work setup is complete.
- If there is a problem with the measurement results, press the [END] key.
  The screen on the right appears if the [END] key is pressed.
  Press [ENTER], return to step 12 for “Setting up the work for the first time after starting up/Changing the work type”, then reset the work.

```
WORK SET
Leaked light detected
Reset the work
```

Check the following points before resetting the work:
- Is the magnetic sheet correctly set?
- Is the cover height correct for the work diameter?
- Is the work set concentrically?

Setting the Printing Start Position

1 Press the MENU key in local mode.



2 Press ▲ ▼ to select [Kebab OriginSet].



- The [Kebab OriginSet] menu is displayed only when the Kebab MkII/Kebab HS System is attached.
- The table height will vary according to the diameter. Enter the work diameter before selecting the menu. (☞ P.27)

3 Press the ENTER key.

- The table moves up or down according to the work diameter, then moves forward.
- If the warning message “WORK High” appears on the display while the table is moving forward, reset the work diameter as described in P.27 “Setting Up the Work”, then repeat the procedure from step 1.
- Once the table has stopped moving, the display returns to the Kebab OriginSet mode.



4 Press ◀ ▶ to rotate the work and align the red light pointer with the position where you wish to start printing.

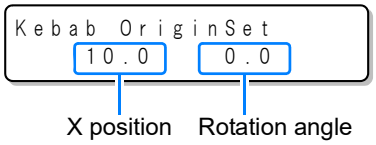

- Move the light pointer mark to the position for starting printing, then set the origin.
- Pressing ◀ ▶ rotates the work on Kebab.
- Pressing ▲ ▼ moves the table backward and forward.

5 Once the origin has been set, press the ENTER key.



- The printing origin is updated.

Important!

- Pressing the [END] key here without pressing the [ENTER] key cancels the setting.

- To print an image modified in RasterLinkTools for use with tapered work, set the printing origin X position to 0 (Measurement position of small diameter).

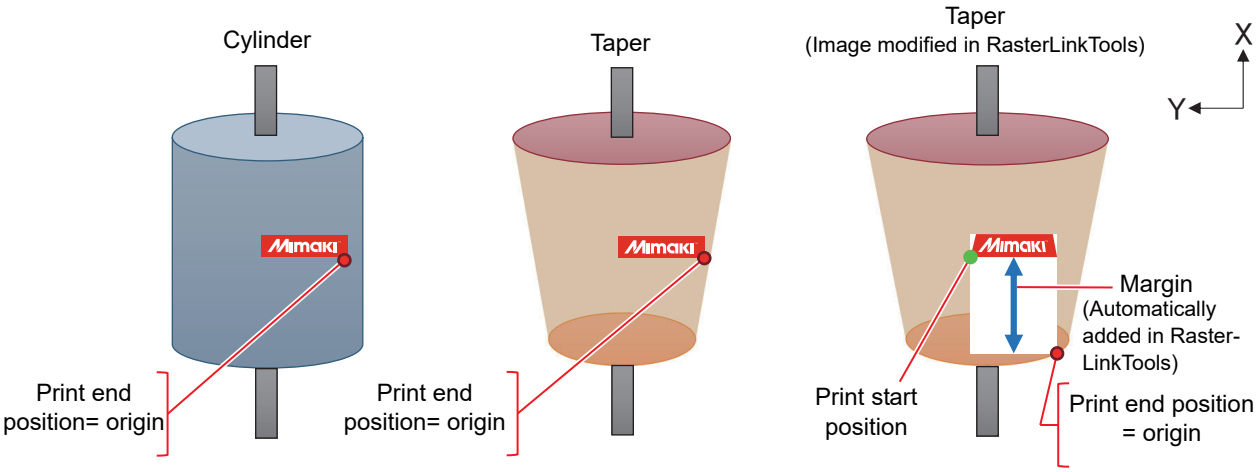

When determining print starting position based on the [Kebab OriginSet] position

If you want to print the work at the same position as the position in the printed images, set [Kebab Offset] to determine print starting position based on the position of the work which [Kebab OriginSet] is set.
(Supported FW: UJF-3042/6042 MkIIe Ver. 3.2 or later, UJF-7151 plusII Ver. 3.3 or later UJF-7151 plusIIe Ver. 1.0 or later, UJF200-3042/6042 Ver. 1.0 or later)

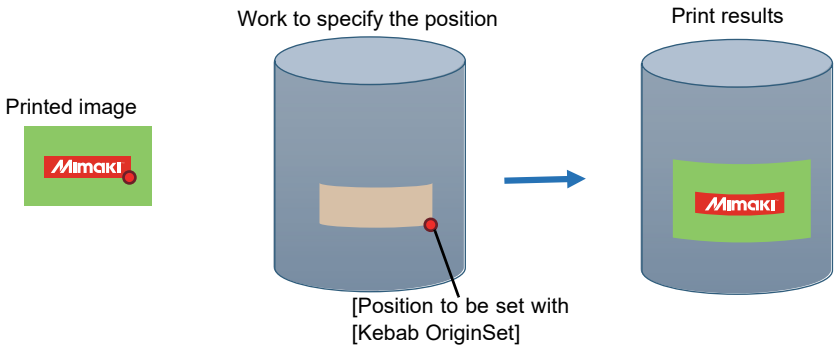

1 Press MENU key in local mode.

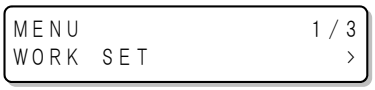

2 Press ▲ ▼ to select [Settings], then press ENTER key.



3 Press ▲ ▼ to select [Kebab offset], and then press ENTER key.



- The [Kebab Offset] menu displays only when the Kebab MkII/Kebab HS system is mounted.

4 Press ▲ ▼ to select [X OFFSET] or [Y OFFSET], and then press ENTER key.

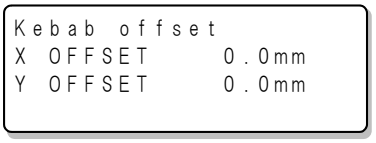

5 Press ◀ ▶ ▲ ▼ to select the distance from the reference position to the image origin, and then press ENTER key.

- ◀ ▶ : Change in units of 10 mm.
- ▲ ▼ : Change in units of 0.1 mm.
- [CLEAR] : Changes the value to 0 mm.Enter a negative value if the reference position is inside the image origin, or a positive value if it is outside.
- If you select the taper work, the Y offset value varies depending on the print position. Perform a test print and determine the value.

Important!

- If you change the Y offset, the following message is displayed. Execute [Kebab OriginSet] again.
(☞ P.36)

Setting example：

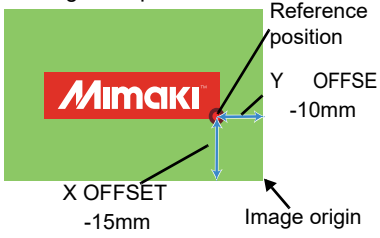

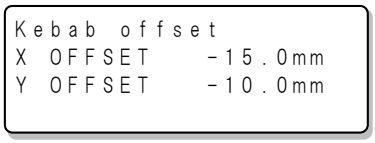



Creating Chucks

The customer must create chucks to match the media being printed on.

1 Ensure that the media is as concentric to the axis of rotation as possible.

- The following problems may arise if the media is excessively eccentric to the axis of rotation:
  - Streaks, color intensity variations, and blurring on the image.
  - The media interferes with the shielding magnetic sheet.



- Increasing the gap between the magnetic sheet and the media to avoid interference risks damage to the head caused by light leakage.

2 Make sure the chucks do not extend beyond the line extending from the printing surface.

- The chucks can use internal or external diameter gripping.



- Particular care is required with tapered media.

3 Make sure that the media does not slip in the chucks.

- Take precautions such as affixing rubber to prevent slipping or securing with tape.

For straight media

① : Use bore A.
② : Use bore B.
③ : Make the chuck mounting diameter smaller than the printing surface diameter.
④ : Rubber should be attached to the chuck to prevent the media slipping.

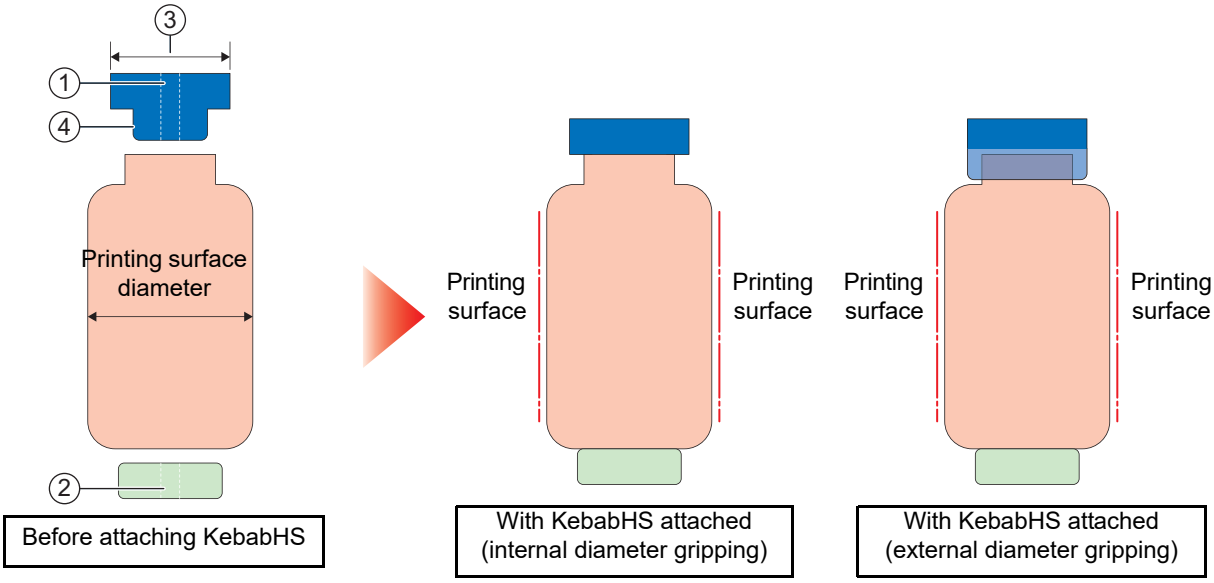

Cross-sectional view of bore A	Cross-sectional view of bore B
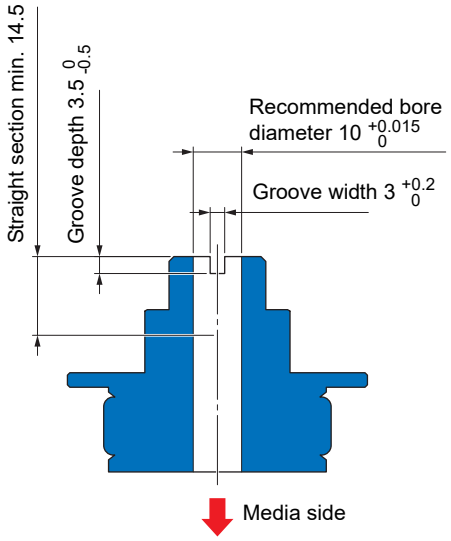	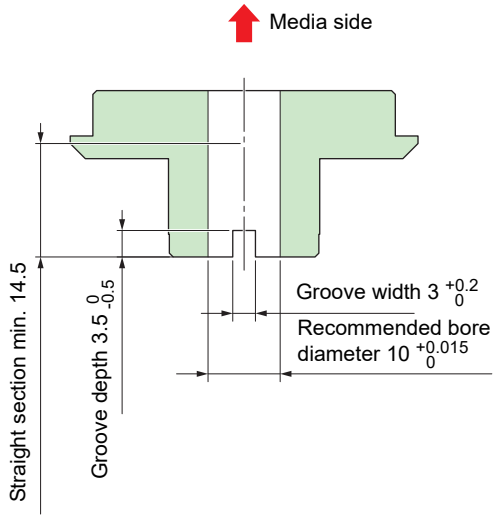

- The chuck bore is the same for both straight and tapered media. The bore is also the same for both drive and idler sides.

For tapered media

① : Use bore C.
② : Use bore D.
③ : Make smaller than the large diameter of the tapered media.
④ : Rubber should be attached to the chuck to prevent the media slipping.
⑤ : Make smaller than the small diameter of the tapered media, and make smaller than the width between the lines extending from the printing surface.

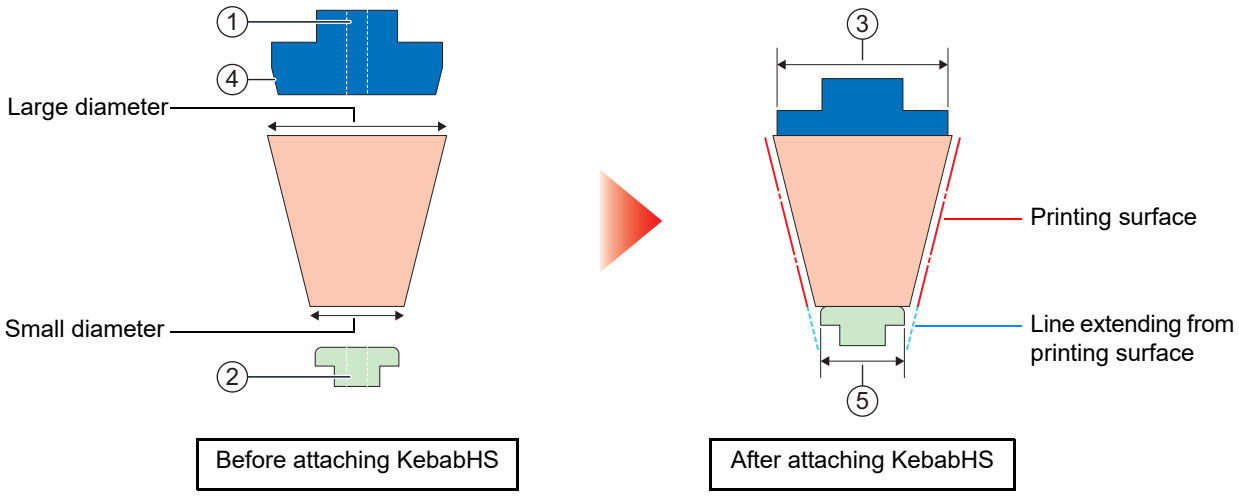

Cross-sectional view of bore C	Cross-sectional view of bore D
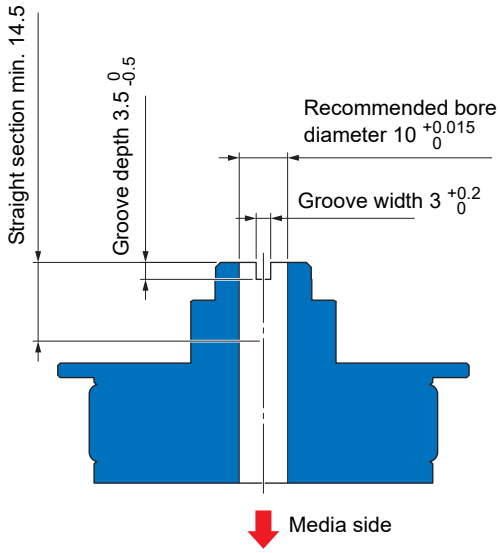	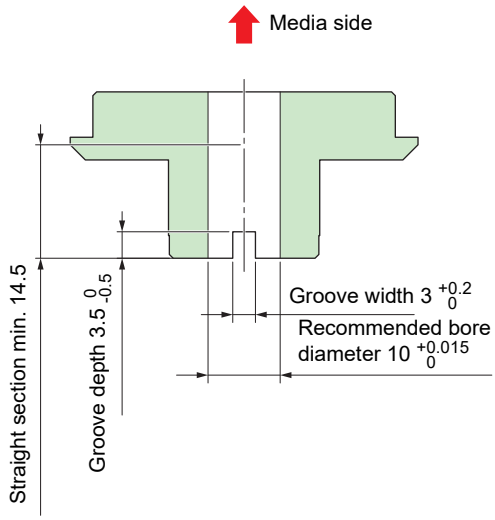

- The chuck bore is the same for both straight and tapered media. The bore is also the same for both drive and idler sides.

Modifying the UV Light-Blocking Cover and Measuring Light Levels

Modifying the magnetic sheet

If the work has a complex shape, there is a possibility of UV light leaking from between gaps.
This light leakage can be minimized by modifying the magnetic sheet and using a light-blocking cover to suit the work shape.

1 Set up a work.

- For details of how to set up the work, refer to the following:
  ☞ “Setting Up the Work” on page 27

2 Attach the cover.

- Use a scale to confirm that the work is no more than approximately 0 to 2 mm above the cover, then attach the cover.

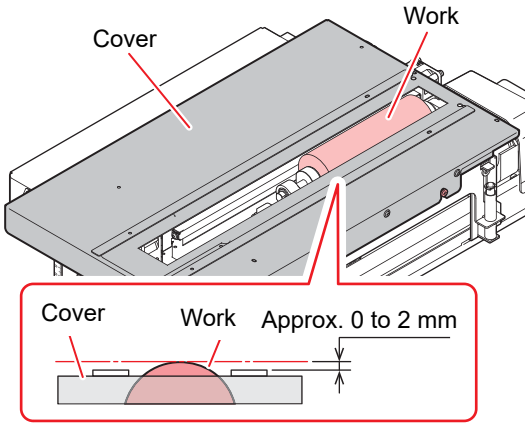

3 Mount the profile gauges.

- Mount the profile gauges so that they are flush with the step on the guides.
- The profile gauges have a locking mechanism. Arrange so that the locking mechanism is as shown on the right.

- The profile gauges will be reset in later steps. Affix masking tape in front of the profile gauges to mark the initially set position.

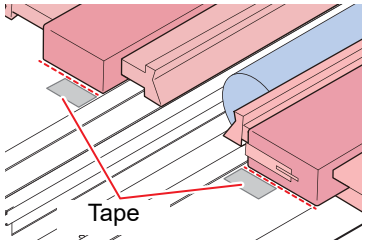

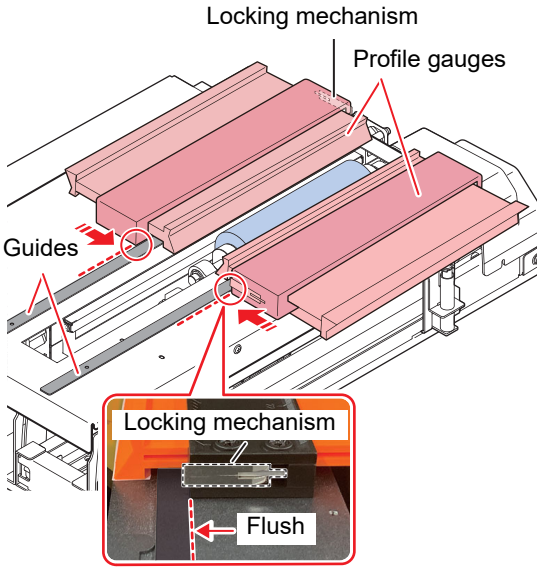

4 Move the profile gauges to match the work profile.

- Move the profile gauges by hand. Slide the left and right profile gauges uniformly.

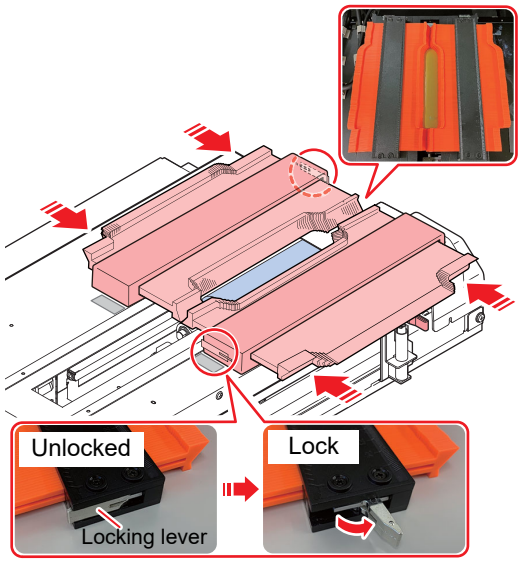

5 Lock the profile gauges once the profile has been taken.

- Pull out the locking lever on each profile gauge to retain the profile taken.

6 Raise the cover above the work, then remove the profile gauges.

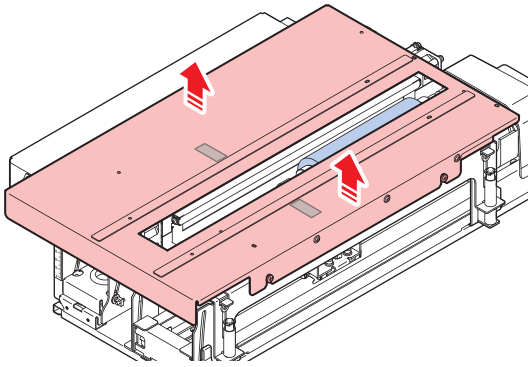

7 Place the magnetic sheet provided on top of the cover.

- Lay the magnetic sheet between the left and right guides.
- Align the rear edge of the magnetic sheet with the edge of the cover.

- The magnetic sheet can be laid either way up.

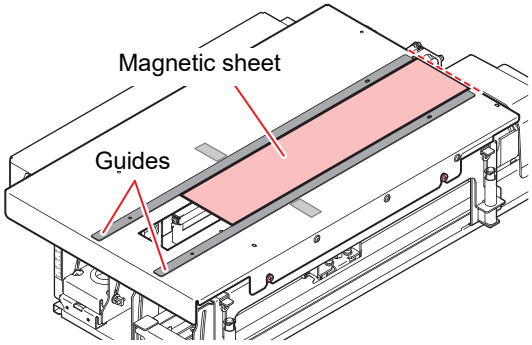

8 Place the profile gauges in their original position.

- Place the profile gauges aligning them with the tape affixed in step 3.

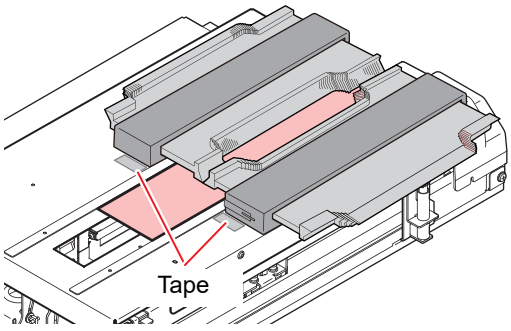

9 Use a marker pen to trace the shape of the profile gauges on to the magnetic sheet.

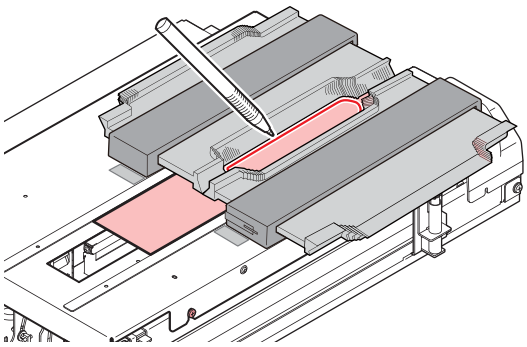

10 Remove the magnetic sheet from the cover, then cut along the traced lines.

- Cutting slightly inside the pen lines allows the cutting line to be fine adjusted later.

11 Remove the profile gauges, then lower the cover.

- Adjust so that the work is approximately 0 to 2 mm above the cover while checking with a scale.

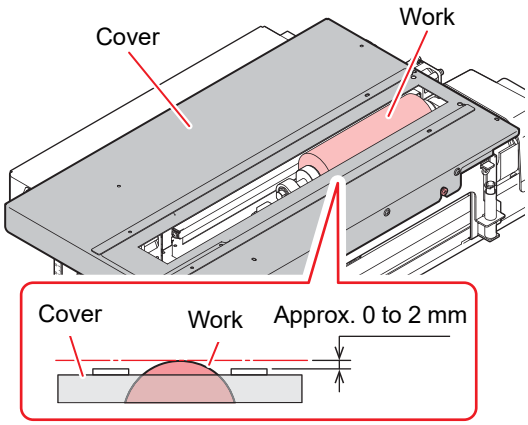

12 Place the cut magnetic sheet on top of the cover.

Important!

- Check the gaps between the work and the cutting lines in the magnetic sheet. Fine adjust by trimming the magnetic sheet so that the gaps do not exceed 2 mm.

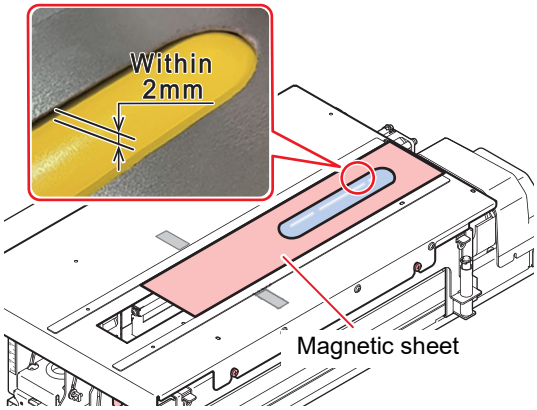

13 Mount the dog cover, then trim the bottom of the magnetic sheet to suit that position.

- When mounting the dog cover, push it up against the front of the work until it clicks.

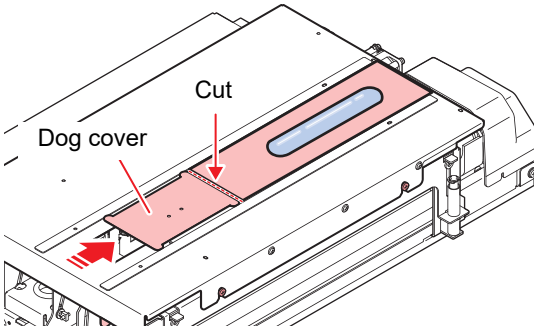

14 Cover the opening in front of the slide cover with the remaining magnetic sheet.

- If there are any other gaps, block them as necessary with tape.

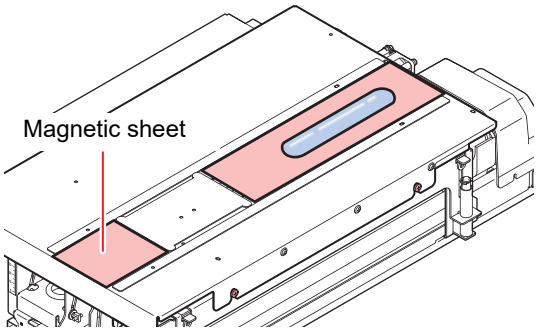

Measuring UV light leakage after setting up the work

In the case of work comprising transparent bottles containing shielding material or work with complex shapes, there is a possibility of UV light above the permitted levels leaking from between gaps. The light leakage levels can be measured beforehand using a commercially available light meter.



Be sure to wear long-sleeved clothing, and the UV light-shielding goggles and gloves that come with the UV printer.

<Recommended light meter>
UVA-UVV light intensity tester UV light meter black light radiation meter
Manufacturer: Sanpometer
Model: UVV420
Measuring range: 0.1 to 400 μW/cm^2
Wavelength range: 370 nm to 470 nm

Important!

- The measurements obtained and detection sensitivity for light meters will vary between manufacturers. Light leakage levels cannot be measured using products other than the recommended light meter.



- ☞ Set up the work as described in the procedure in “Setting Up the Work” on page 27, then select stray light checking on the selection screen that appears midway. The screen on the right appears. Proceed with the measurement procedure.

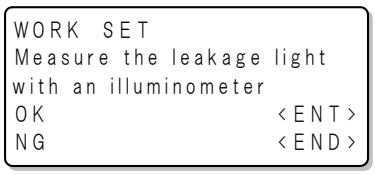

1 Attach the sensor head to the main unit, then press the ⏻ power button once to turn on the UVV420.

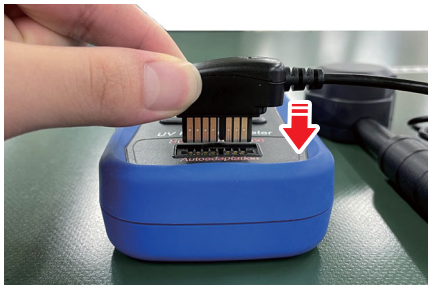

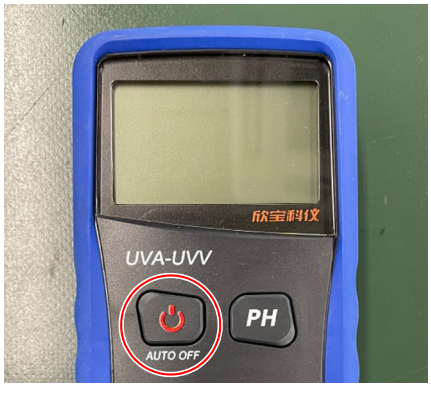

2 Hold down the [RANGE] button to set the minimum range.

- Setting is complete once [uW/cm² 00.0] is displayed on the screen.



3 Press the [PH] button once to select peak hold mode.

- [PH] (peak hold) appears on the screen to indicate peak hold mode.
- If the reading on the screen has changed from [00.0], press the [PH] button once to cancel the peak hold mode, then press the [PH] button once again.



4 Pull off the protective cap of the UV light detector and remove it.

- Pull off the protective cap as shown in the figure.

Caution

- Be sure to pull off the protective cap.Removing it while turning may damage the UV light detector.





Pull it out in the direction of the arrow.

5 Press the FUNC2 (Start) key.

- The set up media rotates, and the UV lamp turns on.

6 Measure the light leakage level.

Important!

- Start measuring as close to the work as possible.
- When measuring, hold the UV light detector, twist your wrist around the axis of your hand, and rotate it left and right while slowly and evenly measuring the magnetic sheet area in the direction of the arrows.

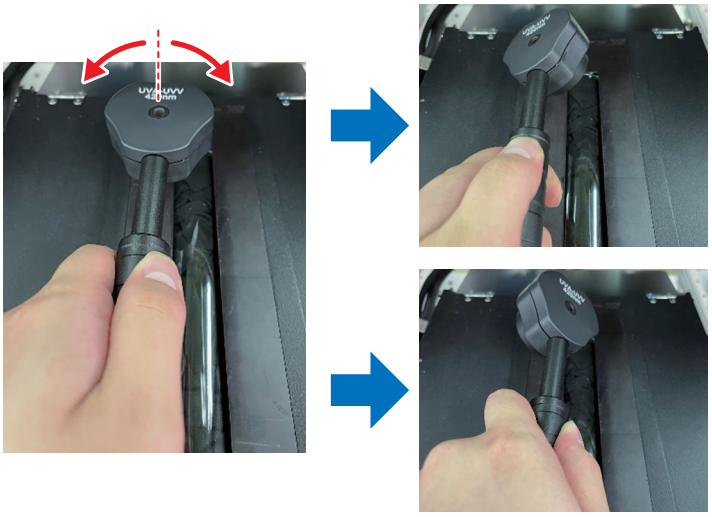

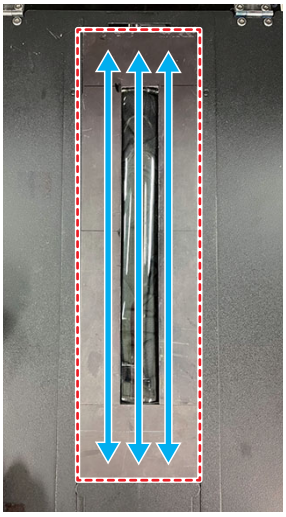

Magnetic sheet area

7 Check the measured value.

- Once measurement is complete, check the reading on the screen.
- If the reading is 1.0 μW/cm^2 or less, printing is possible. If it is 1.1 μW/cm^2 or higher, printing is not recommended.

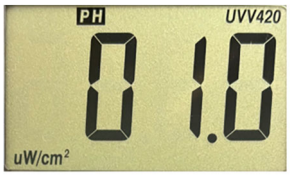

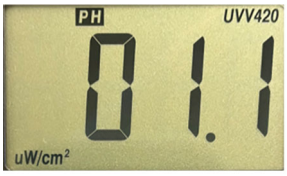

- If printing is not recommended, the UV light leakage exceeds the specified level, so the media setup should be rechecked.

Caution

- Printing with light leakage exceeding the specified level may damage the head.

8 End measurement.

- If there is no problem with the measurement results, press the [ENTER] key.
- If there is a problem with the measurement results, press the [END] key.

9 Press the light meter ⏻ power button once to turn off the power.

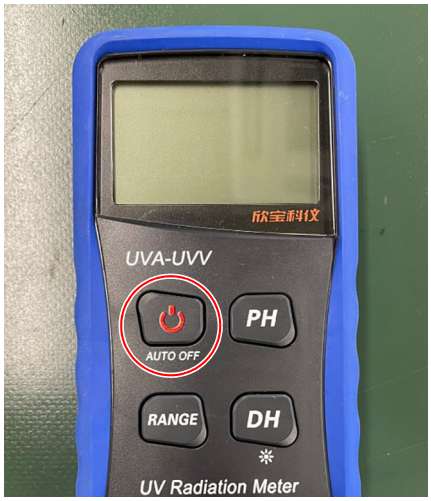

Important!

- Remove the light meter sensor head, and store it with its cover on to keep it clean.



Precautions when replacing batteries

Important!

- When using the UVV420 for the first time, use the screwdriver provided to open the battery cover on the rear of the unit, then pull out the insulating sheet on top of the batteries to the right.
- When replacing the batteries, use the screwdriver and tweezers provided.
- When replacing the batteries, be sure to replace all three batteries at the same time. Otherwise there is a risk of reducing the battery life or not being able to turn on the unit.
  (Batteries used: CR2450 button-type lithium-ion batteries ×3)



The battery icon appears on the screen when the battery level is low. Replace the batteries as follows:

1 Open the battery cover on the rear of the unit using the screwdriver provided.



2 Use anti-static tweezers to remove all three batteries.

Caution

- Be sure to use the anti-static tweezers provided to remove the batteries. There is a risk of short-circuiting the batteries if metal tweezers are use.

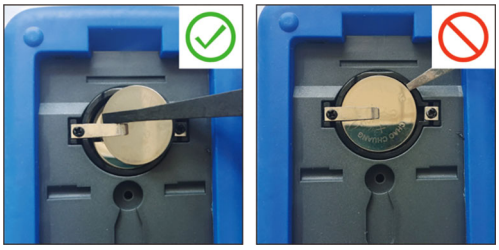

3 Install the new batteries.

Important!

- Note the positive and negative polarity of the batteries when installing them. (Install with the positive side facing up and the negative side facing down.)

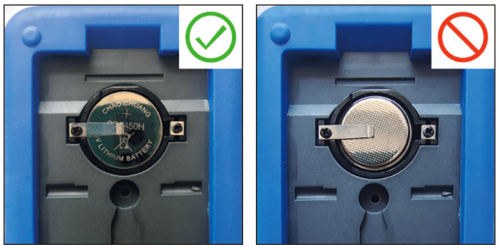

4 After replacing the batteries, close the battery cover on the rear of the unit using the screwdriver provided.



Creating Print Data

Create data for printing on to the work.

Important!

- Create the print data at the actual size it will be printed.
  Enlarging or reducing print data after it has been read in using RasterLink may affect the image aspect ratio.
- To print data modified trapezoidally for a tapered shape, use [RasterLinkTools] to modify the print data. For details of data creation, refer to “RasterLinkTools Guide”.

Measuring the print area size

The following dimensions must be checked before printing.

Measure the following dimensions for the area on the work to be printed on.

- **Cylinder height *1**
- **Cylinder diameter *2**

*1 For a tapered work, measure the length of work side.

- Measurement position of the length of work side

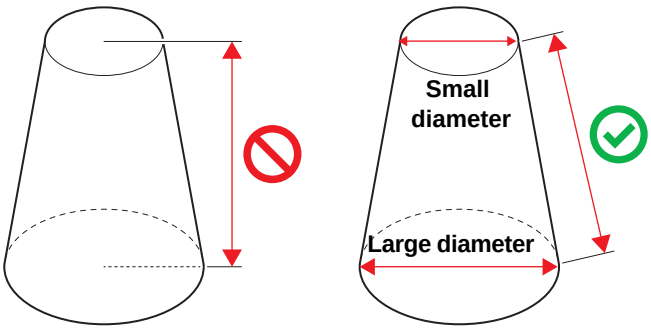

For [Cylinder]:

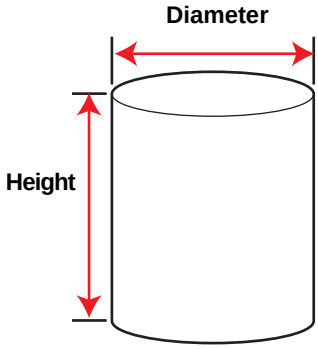

*2 For a tapered work, measure both the top and bottom diameters.

Creating print data

Create the print data.

- Create the print data in any one of the following formats:
  PS, EPS, TIFF, JPEG, BMP, PDF
- Provide the print data with the work spread out.

The image size must be as follows.

- For cylinder with identical size top and bottom faces:
  Height: Not exceeding the cylinder height
  Width: Not exceeding 3.14 × cylinder diameter (= circumference)

- For cylinder with different size top and bottom faces (tapered shape):
  Height: Not exceeding the length of work side
  Width: Not exceeding 3.14 × top face (larger face) diameter (= top face circumference)*

* Using the Illustrator (/CorelDraw) plugin “RasterLinkTools” provided by Mimaki allows images to be modified to achieve a natural appearance on a tapered cylindrical shape when viewed from the front. In such cases, the width should be set to 1/6 of the large diameter circumference.
For details on how to use RasterLinkTools to modify images for tapered work, refer to “RasterLinkTools Guide” on the RasterLink manual download site.

Test Printing

Before printing, perform a test print to check that there are no printing defects (blurring or missing dots) such as nozzle clogging.

1 Place the media for test printing over the light-blocking cover.

- Attach the media using tape.

Important!

- Take care to ensure that the edges of the media do not curl up.

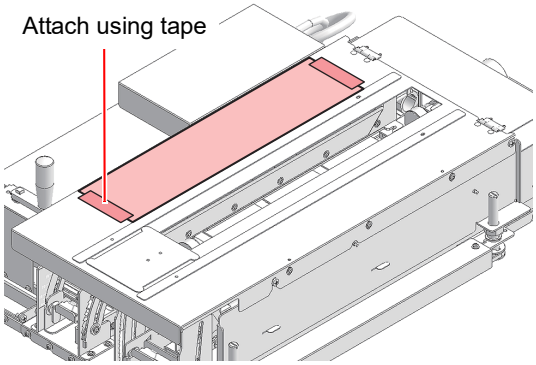

2 Refer to Chapter 2 “Test Printing” in the printer Operation Manual, and perform a test print.

- The X and Y origins are set automatically.
- Printing starts at the same position each time.
- Check the printed results, and print the data if no problems are observed.
- If problems are observed, clean the head. (Refer to Chapter 2 “Head Cleaning” in the printer Operation Manual.)

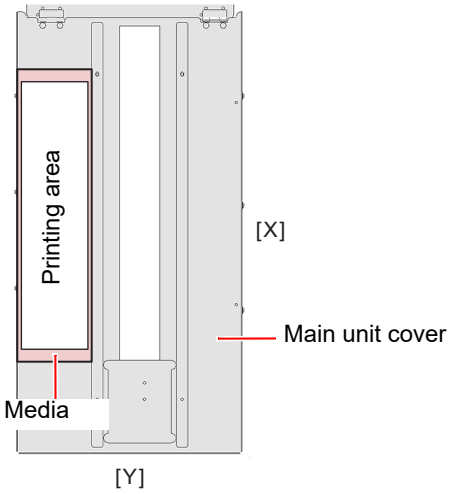

- When printing on the actual work after performing a test print, restore the origin set for the printing start position (☞ P.36).

Enabling Kebab Printing

In order to use Kebab HS to print on work, the Kebab printing function must be enabled in RasterLink.

1 Select [Printer Management] in [Environments].

• The Printer Management dialog box is displayed.

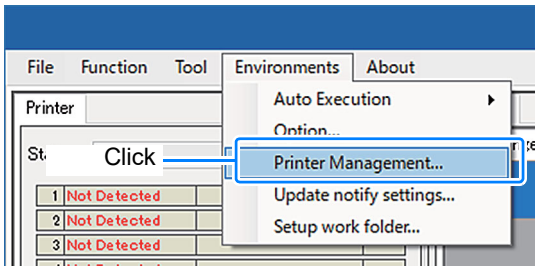

2 Click the printer to be used, then click [Function Icon].

• The Function icon setting dialog box is displayed.

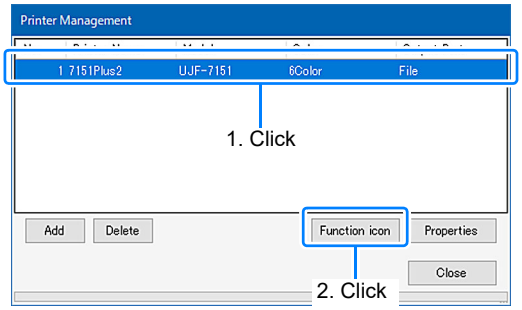

3 Select the “Kebab Jig Print” checkbox.

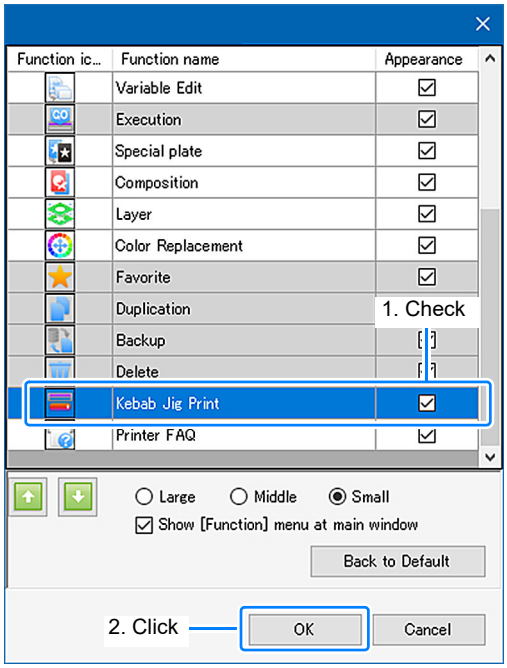

4 Click [OK].

5 Click [Close] to exit printer management.

• The “Kebab Jig Print” icon is displayed.

Printing Data

Important!

- When printing on lightweight work or work with uneven surfaces, friction may be reduced between the roller and work causing slipping and preventing accurate printing.
  It is recommended that you print on a sample work before starting actual printing.
- Also read the RasterLink Reference Guide thoroughly in addition to this manual.
- When printing with clear ink, please read carefully the Clear Ink Printing Guide for each printer in conjunction with this manual. printing conditions may be set when using Kebab HS.
- When using Kebab HS, the Illuminance and Additional UV irradiation settings are disabled in [Job Attribute]-[UV Mode] of RasterLink.(They can be displayed by selecting a job and clicking Job Attributes [Settings] on the Properties screen.)

Start printing

1 Set up the work for adjustment.

- Set up the work referring to P.27 Setting Up the Work.
- Measure the size of the work to be printed on and prepare print data to precisely match the work circumference and height beforehand. (☞ P.50 Creating Print Data)

2 Press the REMOTE key in printer local mode.

- Remote mode is selected, enabling data to be received from the PC.
- The table height is displayed.

3 Spool the print data.

- Select [File] - [Open].

4 Select the file to be printed. Click [Open].

- The file is loaded, and the files loaded are displayed in the job list.

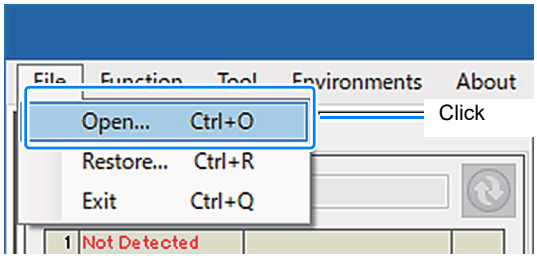

5 Select the job to be printed.

- When printing with primer ink, set RasterLink to the following settings.

(1) In case of normal printing (matte tone)
  - In [Properties], set [Job Attributes] [Special Color Version] to 40%.
  - Use 600x600/8 or 600x900/12 as the resolution/path in [Print Condition], and Set [Print primer at recommended density] to OFF.

(2) In case of glossy printing
  - In [Properties], set [Job Attributes] [Special Color] to 100%.
  - Use a resolution of 600x900 in [Print Condition], Set [Print primer at recommended density] to OFF.

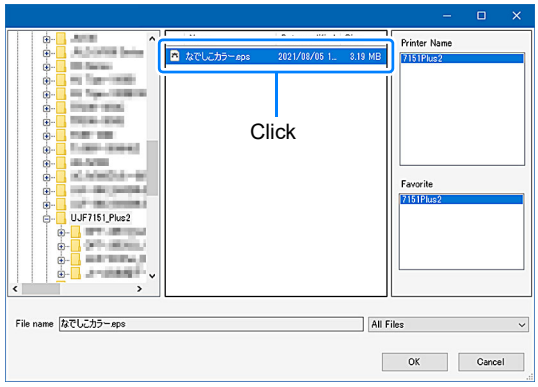

6 Click the (Kebab Jig Print) icon.

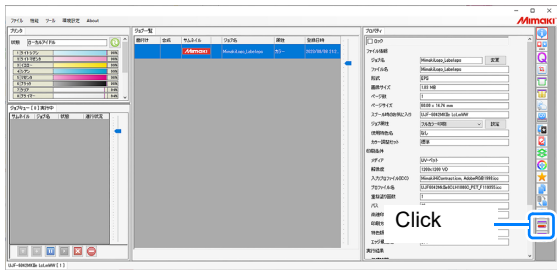

7 Select the “Kebab Edit” checkbox.

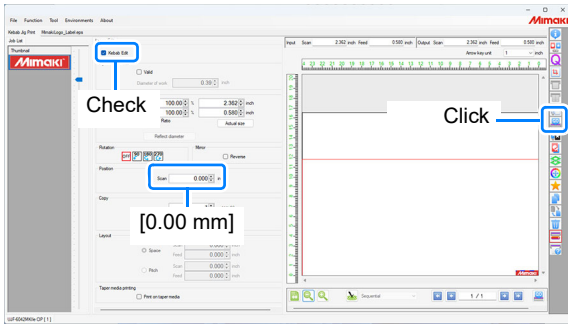

Important!

- To print on to a tapered shape work, select the [Print on taper media] checkbox.

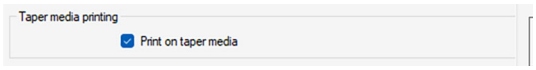

- The [Execute] menu is displayed.
- Set [Move] - [Width] to [0.00 mm].

- RasterLink preview and print position
  The correlation between the origin and printing position is as follows depending on the work shape and image modification.

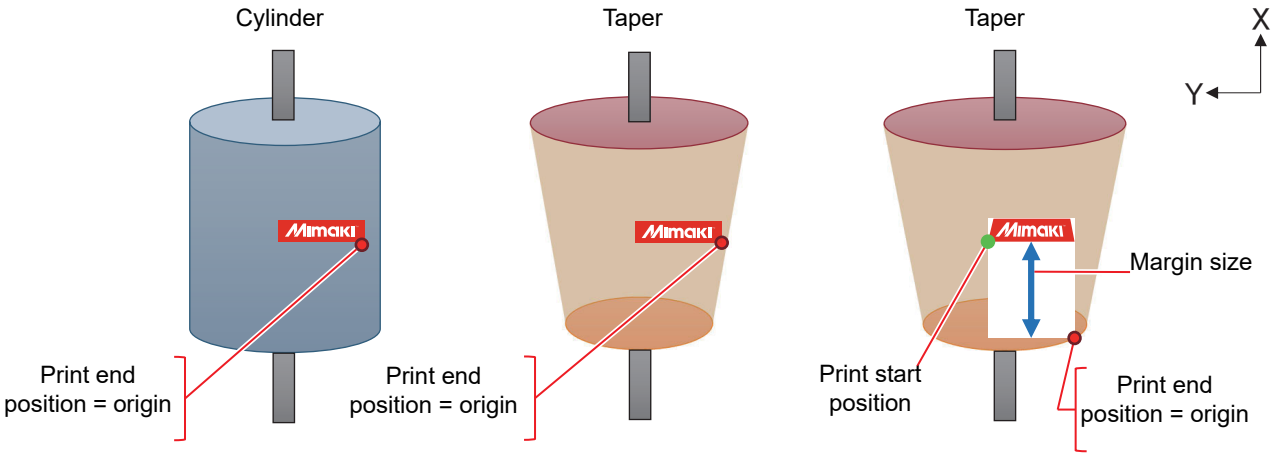

RasterLink Kebab screen (no modification)

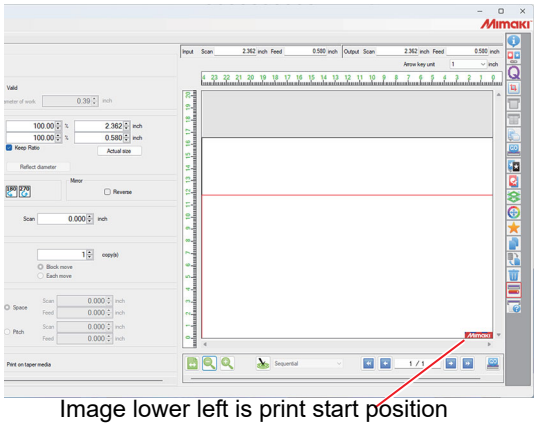

Image lower left is print start position

RasterLink Kebab screen (modified for tapered work in RasterLinkTools)

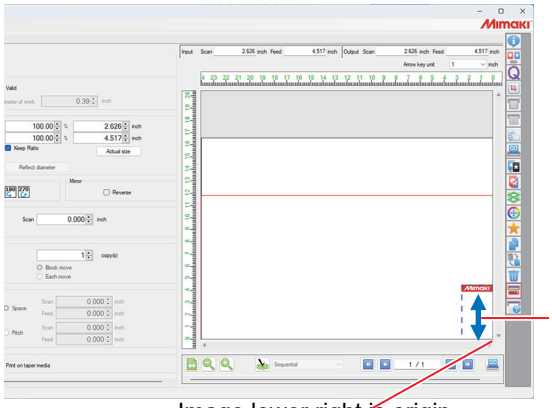

Image lower right is origin

8 Click GO (Execute).

• Select [Immediate Print] or [RIP and Print], then click [Start].

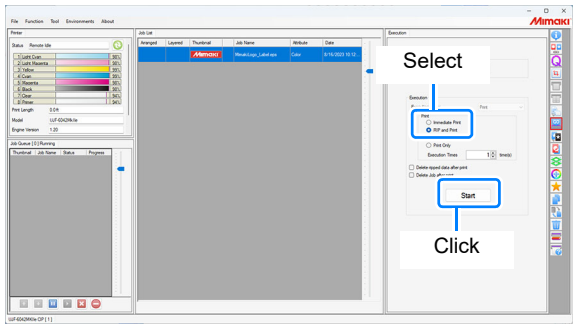

9 The data to be printed is sent from the PC.

• Printing conditions are displayed.
• For details of how to send data, refer to the output software operation manual.

[For UJF-3042/6042MkIIe, UJF200-3042/6042]

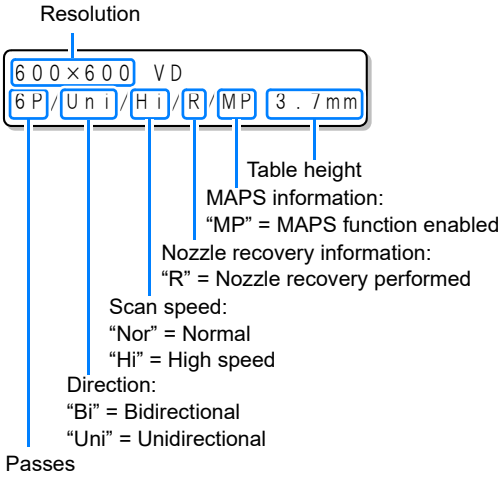

[For UJF-7151 plusII / UJF-7151 plusIIe]

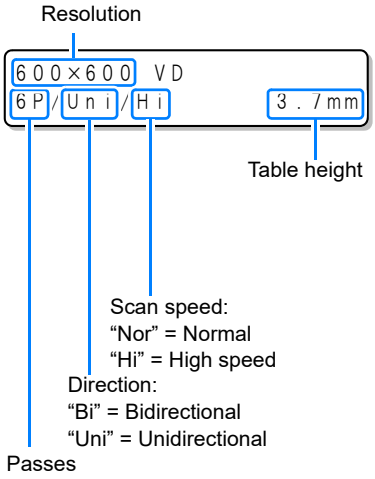

10 Start printing.

11 Once printing is complete, remove the work.

(1) Pull the slide chuck toward you while pushing up the spring release lever.

(2) Pull the work toward you to remove it.

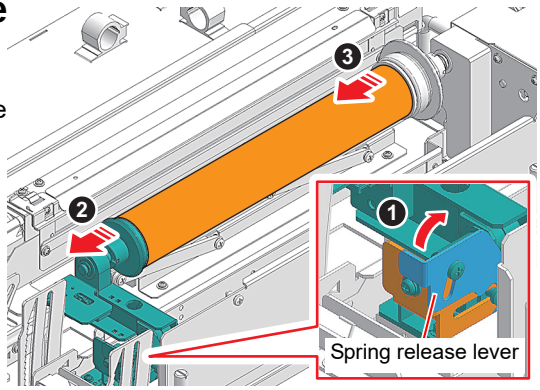

• It is recommended that cleaning be performed after printing to prevent nozzle clogging.

Abort printing

To abort printing midway, stop the printing operation and delete the data already received from the machine.

1 Stop sending data from the PC.

2 Press the FUNC3 key while printing is in progress.



- Stop the printing operation.

Caution

- To prevent misalignment when resuming printing, the work continues to rotate during the pause.

3 Press the DATACLEAR key while pressing SEL.



4 Press the ENTER key.

- The data is cleared and the system returns to local mode.



Creating data to precisely fit the work printing area (for cylinders)

If images are overlapping or gaps are left when printing on a sample work, use the following procedure to print precisely on to the work size.

1 Perform steps 1 to 7 of “Start printing”.

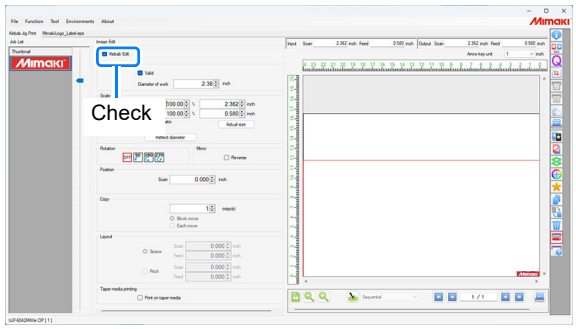

2 Select the “Valid” checkbox on the “Input of diameter” screen, then enter the diameter of the work to be set.

- Entering the work diameter automatically calculates the work circumference.

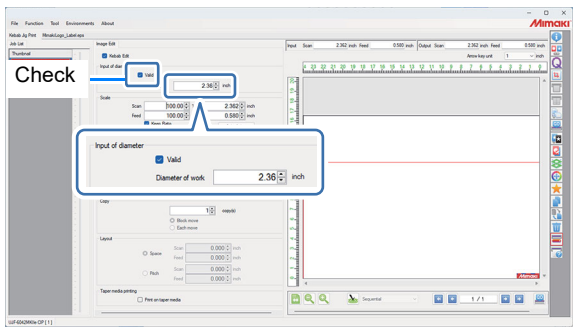

3 Select the “Reflect diameter” on the “Scale” screen.

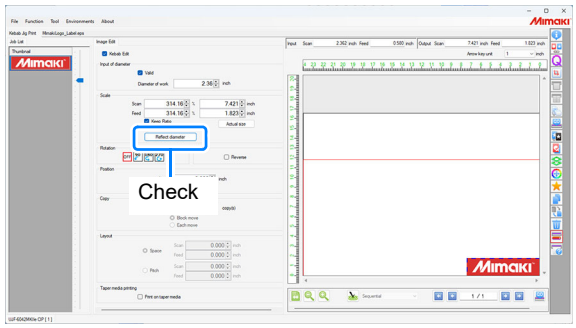

4 Print using the procedure from step 8 of “Start printing”.

Caution

- The surface of the work may be hot immediately after printing. Take care not to touch the work until it has sufficiently cooled.

Adjustment

Origin adjustment

This is adjustment to align the Y position on the work rotation axis with the Y position at the center of the head. Adjustment is required if there are multiple printers and the Kebab HS is attached to different printers.

1 Set up the work and set the Kebab origin first before adjusting.

- "Setting Up the Work" (☞ P.27)
- "Setting the Printing Start Position" (☞ P.36)

2 Select the menu as shown below:

- UJF200-3042/6042: [Environment Setting]>[KEBAB HS ADJUST]
- Other models: [MACHINE SETUP] > [KEBAB HS ADJUST]



Important!

- [KEBAB HS ADJUST] cannot be used unless the work setup is complete.

3 Select [ORIGIN ADJUST].

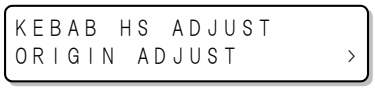

4 Press the ENTER key to print an adjustment pattern.

- Press the [↑][↓][←][→] keys on the print start screen to display the origin setting menu. The carriage moves.
- Use the jog keys to align the pointer with the origin, then press the [ENTER] key to start printing.



5 Enter correction values based on the print results.

[Adjustment method]

- If the broken lines are offset to the left of the solid lines: Adjust correction values in positive direction
- If the broken lines are offset to the right of the solid lines: Adjust correction values in negative direction

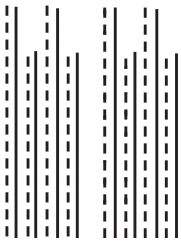

Adjust correction values in positive direction

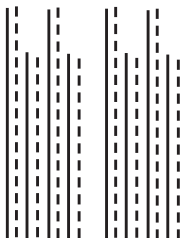

Adjust correction values in negative direction

6 Repeat steps 1 to 5 until the broken lines coincide with the solid lines on the adjustment pattern.

Head spacing adjustment

This is adjustment to eliminate drop position offset caused by head spacing offsets.
Adjustment is required if there are multiple printers and the Kebab HS is attached to different printers.

Important! • This procedure is not required for UJF200-3042/6042 models.

1 Set up the work and set the Kebab origin first before adjusting.

Caution
- Adjustment is recommended for cylindrical work. (Head spacing adjustment for cylindrical work can only be performed on cylindrical works.)
- When using a tapered work, printing on the small diameter side may be difficult to adjust.

- "Setting Up the Work" (☞ P.27)
- "Setting the Printing Start Position" (☞ P.36)

2 Select [MACHINE SETUP] > [KEBAB HS ADJUST].



Important! • [KEBAB HS ADJUST] cannot be used unless the work setup is complete.

3 Select [HEAD POS ADJUST].



4 Press ▲ ▼ to select [Work Type].

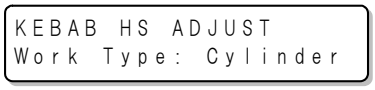

- Work type: Cylinder/Taper

5 Press the ▲ ▼ key to select the head to be adjusted.



- Select [HEAD ALL], then print adjustment patterns using all heads. [HEAD ALL] should normally be used for adjustment.

6 Press the ENTER key to print an adjustment pattern.



- Press the [→] key on the print start screen to display the correction value input screen without starting printing.
- Press the [↑][↓][←] keys to display the origin setting menu. The carriage moves.
- Use the jog keys to align the pointer with the origin, then press the [ENTER] key to start printing.

7 Enter correction values for each head based on the print results.

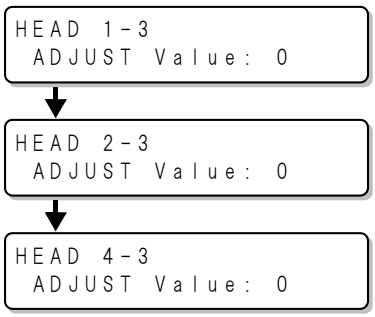

- With cylinder selected:
  - UJF-3042MkIIe: Head 1-2 to Head 3-2
  - UJF-6042MkIIe: Head 1-3 to Head 4-3
  - UJF-7151 plusII / UJF-7151 plusIIe: Head 1-8 to Head 7-8
- With taper selected:
  - UJF-3042MkIIe: H2B-H1A to H2B-H3B
  - UJF-6042MkIIe: H3B-H1A to H3B-H4B
  - UJF-7151 plusII / UJF-7151 plusIIe: H8B-H1A to H8B-H8A

For UJF-3042MkII e, UJF-6042MkII e, UJF-7151 plusII, and UJF-7151 plusIIe

[Adjustment method]
Adjust so that the colored rectangle aligns with the black rectangle.
- If offset to the left of the black rectangle: Adjust correction values in negative direction
- If offset to the right of the black rectangle: Adjust correction values in positive direction



Adjust correction values in negative direction



Adjust correction values in positive direction

Adjustment pattern Image (Ex:UJF-6042MkIIe 6-color Inkset)

〈Cylinder HEAD ALL〉

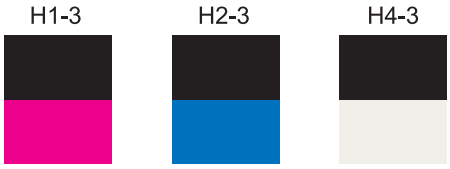

〈Taper HEAD ALL〉

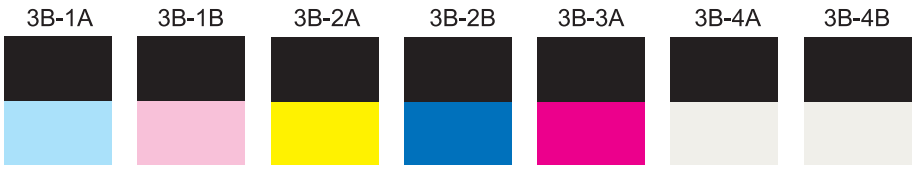

8 Repeat steps 1 to 7 until the colored rectangle aligns with the black rectangle on the adjustment pattern.

Error List

Display	Cause	Corrective action
ATTENTION 4a9 Work rotation speed	The work is slipping. Or the work is touching the cover.	• Attach the work in the jig so that it does not slip. • Mount the work so that it is not touching the cover.
ATTENTION 55d KebabHS Cover/Chuck Open	The KebabHS main unit cover is open. Or the light-blocking cover is not mounted.	• Mount the work, then attach the main unit cover. • Mount the light-blocking cover. • Check to confirm that the cable is connected between the KebabHS main unit and the power supply unit.
ATTENTION 75F KBBHS UVLamp Temp High	High temperatures of UV LED was detected.	• Make sure that no foreign objects are attached to the cooling FAN at the front and rear ends of the UV lamp unit.
ATTENTION 760 KBBHS UVDrive Temp High	High temperature in the PCB box was detected.	• Make sure that there are no foreign objects attached to the cooling FAN on the front side of the PCB box.
ATTENTION 933 Work isn't set	The work is not mounted.	• Use the [WORK SET] menu to mount the work.
ERROR 56b KebabHS UV FAN ERR FRONT KebabHS UV FAN ERR REAR	KebabHS UV cooling FAN rotation anomaly detected.	• Remove the main unit cover and let it stand for a few minutes. • If the display does not disappear even after a few minutes left, contact your dealer, our sales office, or the call center.
ERROR b3f UVD32B fuse error	Electricity supply to KebabHS is not sufficient.	• Reinstall the light bocking cover.*1 • Push the slide spring in again.*1
ERROR b42 PCB UVD32B	KebabHS detection failed.	• Turn off the power, reconnect the KebabHS, then restart.
INFORMATION 936 Work mismatch	The print data does not match the work settings.	• Use [WORK SET] to set the media type to match the type of media to be printed. • Set the software work settings to the type of media to be printed.

*1：Referring to the illustration, push the light-blocking cover and slide spring all the way to the back.

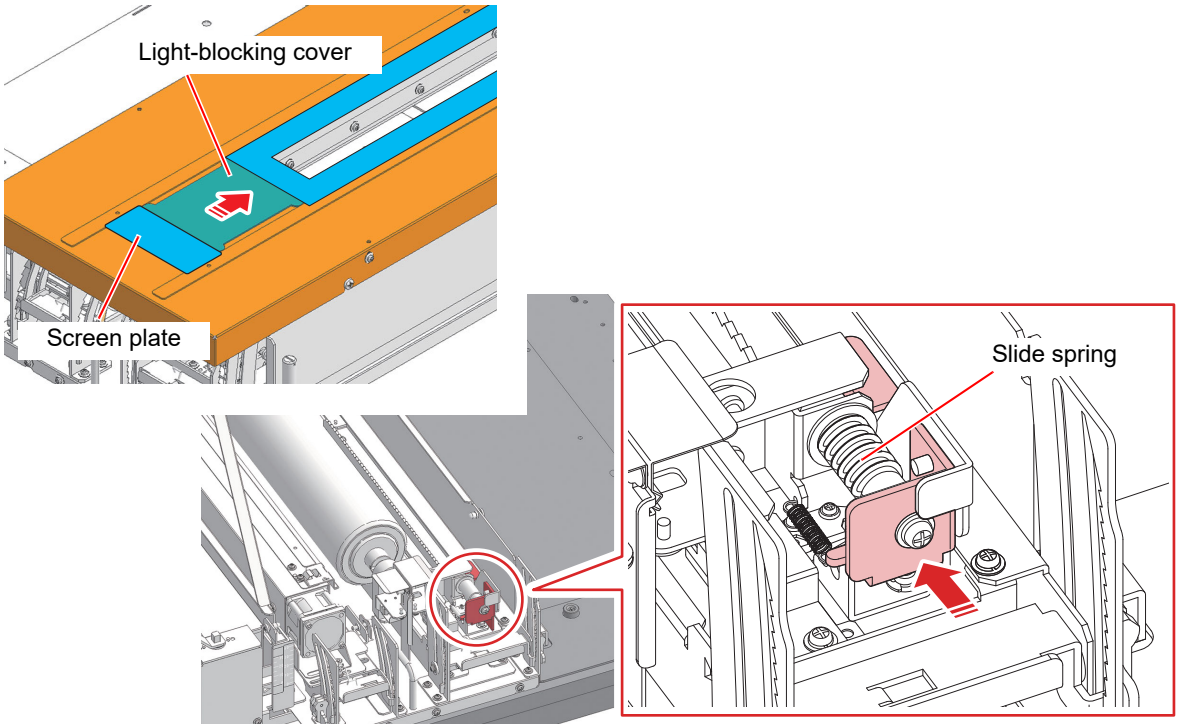

Machine Specifications

Item		Specifications
		Kebab HS System
Compatible printers		UJF-3042/6042MkIIe, UJF-7151 plusII / UJF-7151 plusIIe, UJF200-3042/6042
Printing resolution		Dependent on printer used
Printing modes		
Supported inks		LH-100, LUS-120, PR-200, ELH-100, ELS-120
Supported work	Form	Cylindrical work/tapered media (max. slope angle 7.5°)
	Length	30 mm to 280 mm*
	Diameter	50 mm to 100 mm
Maximum printing area		Max. length 300 mm
Maximum work weight		Max. 3.0 kg
Interface		Connection to printer via dedicated connector
Power supply specifications		Supplied from printer via dedicated connector
Safety standards		VCCI Class A, CE Marking, CB Report, IEC 62368-1 (when connected to printer)
Weight of main unit		12.9 kg Breakdown: Kebab main unit (work unit) 6.9 kg LED unit (power supply unit) 4 kg Main unit cover 2 kg
External dimensions		376 mm (W) × 541 mm (D) × 150 mm (H) max.

* When using the accessory chuck.

Kebab HS System Operation Manual

November 2026

© Mimaki Engineering Co., Ltd.

2182-3 Shigeno-otsu, Tomi-shi, Nagano 389-0512 Japan

This manual is not included with the optional product.
You can download the latest manual from our website.

D203843-31-20112026



© Mimaki Engineering Co., Ltd. 2024